2020 Dealer Catalog

Martin Planter Attachments

Martin Industries LLC
206 Elk Fork Road
Elkton, KY 42220
Telephone: 270-265-5817
E-Mail: martin@martintill.com
www.martintill.com

VERSION 06/8/2020

Parts Breakdowns

Planter Attachment **Page(s)**

ACCR1360……..…..3-5

ACCR1345……..……..6-8

WA1360 Floating Row Cleaner……..……..…….. 9-10

WA1345 Narrow Floating Row Cleaner……..…….. 11-12

Row Cleaner Mounts…….…….. 13-16

Razor Wheel option to replace 13” toothed wheel…….…….. 17

Smart Clean……..…….. 18-23

UMO-150……..…….……. 24-26

UMO-100 Fertilizer Opener Mounts……..…… 27-29

UMO Mounts……30-32

Dual UMO Mounts and Cleaner Combination…….…… 33-35

Selection Guide for WA1360……..……..36

Options for WA1360……..…….…….37-43

Pin Adjust Row Cleaners and Mounts…….…..…….…… 44-65

C125 Floating Row Cleaner and Mounts……..……. 66-72

Options for C125……..…….. 73-74

C125 For Great Plains Twin Row Planter……..……..…... 75-76

Row Cleaner Hubs and Repair Kits……..…….…… 77-82

Weight Transfer **(New Products)**……..…… 83-85

Closing Systems **(New Products)**…….…..…… 86-87

Closing Wheels ……..……..…… 88-107

Closing Wheel Hubs for all Closing Wheels……..…… 108

Drag Chain Kits……..…… 109

Seed “Speed” Disc……..…… 110

Replacement Wheels…….…….…… 111-120

Options……121-123

Model ACCR1360

ACCR1360**Z** shown

Shown with optional Razor Wheels. When ordering without Razor Wheels use **ACCR1360**
Add Z to specify Razor Wheels in place of standard Spike Wheel **ACCR1360Z.**

ACCR1360 Compact Clean Ride short Row Cleaner

4" Travel follows ground contours while maintaining optimum cleaning action at all elevations. Stop bolt can be adjusted to limit depth allowing row cleaner to float from that point upward. Compatible with Clean Sweep or Smart Clean(SC-CYL-2X2) cylinders **not** included in price. Cylinder mounting brackets included.
Designed to mount to most row units, Deere, Kinze, White, Harvest International and Horsch.
Can be fitted to Case IH row unit with additional Mounting Brackets (**900023**).
Case IH 1200 series requires qty 2 of **CIH1200ST** to limit row unit up travel (included in 900023).

*Patented

Exploded View- Model ACCR1360 Compact Clean Ride short Row Cleaner

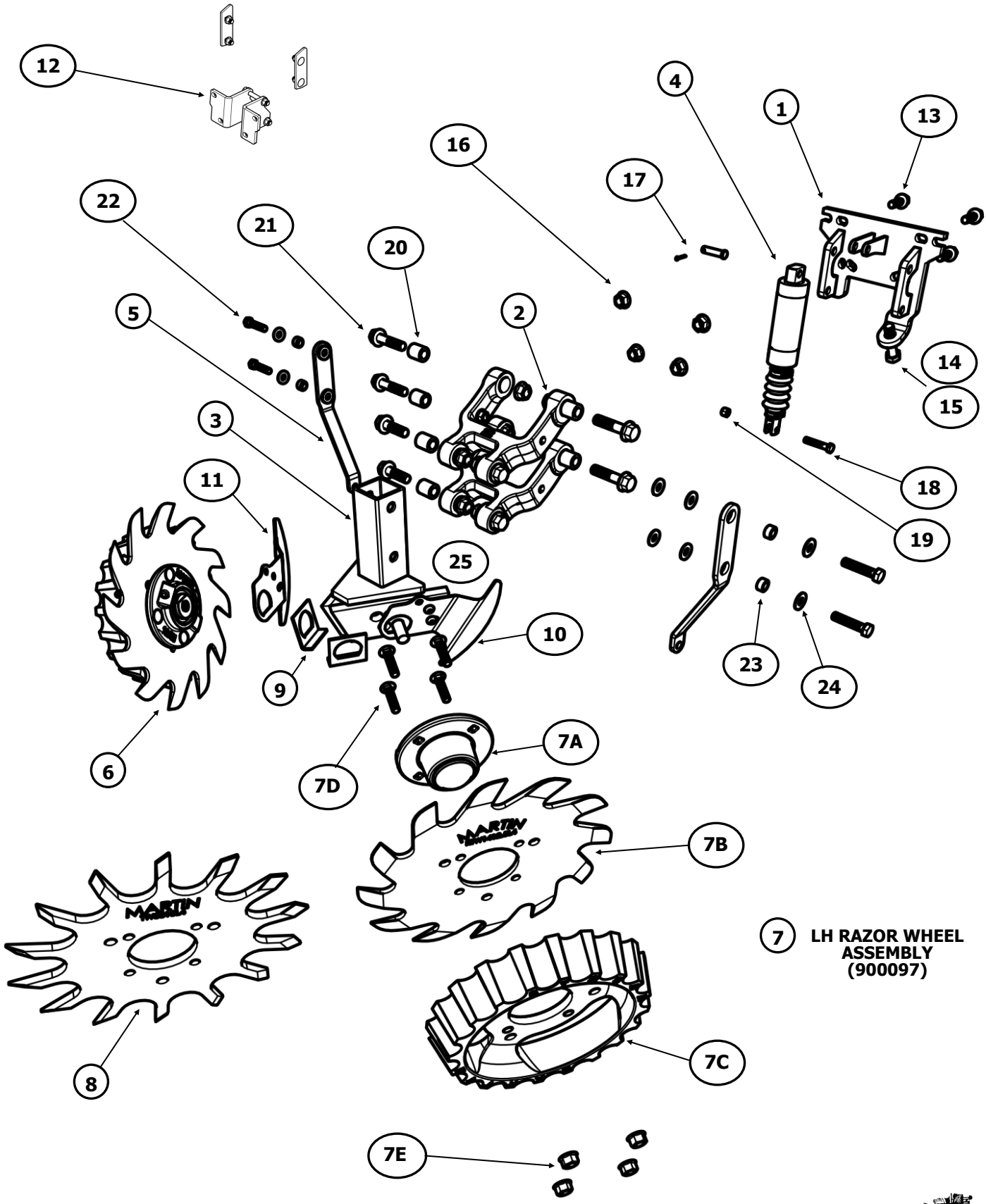

ITEM NO.	PART NUMBER	DESCRIPTION
1	MT1334CCR (900043)	CCR MOUNT 1360
2	CCRL5 (800320)	PARALLEL ARM
3	ACCR1360STEM (900011)	1360 STEM
4	SC-CYL-2X2 (800322)	SMART CLEAN CYLINDER
5	SC1360CCR (800069)	CCR SMART CLEAN BRACKET (800025 FOR CASE-IH 1200)
6	ARTW125R27044STW (900098)	13" RAZOR WHL W/ HUB AND STW RH
7	ARTW125L27044STW (900097)	13" RAZOR WHL W/ HUB AND STW LH
7A	HA44270D (900177)	R-HUB ASSEMBLY
7B	RTW1412.5-L4 (800287)	12.5" RAZOR WHEEL LH
7C	STW04A (800288)	SIDE TREADER WHEEL
7D	B5C38134 (782316)	3/8-16 X 1 3/4 CARRAIGE BOLT
7E	N38CFL (785300)	3/8-16 FLANGE LOCK NUT
8	TW3813L4 (800289)	13" SPIKE WHEEL
9	DLR-01 (800321)	D-LOCK (NOT USED WITH SCRAPPERS)
10	DLD-02L (800231)	LEFT SCRAPPER (SUBSTITUTE FOR D-LOCK)
11	DLD-02R (800230)	RIGHT SCRAPPER (SUBSTITUTE FOR D-LOCK)
12	900023	MT PACKAGE FOR CASE IH 1200
13	B5F12NC112 (783514)	1/2-13 X 1 1/2 FLANGE BOLT
14	B5M58NC3 (784630)	5/8-11 X 3 TAP BOLT
15	N58CNLT (786601)	5/8-11 JAM NUT
16	N12CFL (785500)	1/2-13 FLANGE LOCK NUT
17	SC-TP716 (709011 &709016)	7/16" CLEVIS PIN AND COTTER PIN
18	B5M38NC2 (784320)	3/8-16 X 2 HEX BOLT
19	N38CNLT (786300)	3/8-16 NYLOCK NUT
20	BU7812 (800245)	PIVOT BUSHING (7/8 OD X 5/8 ID)
21	B5F12NC212 (783524)	1/2-13 X 2 1/2 FLANGE BOLT
22	B5M38NC134 (784316)	3/8-16 X 1 3/4 HEX BOLT
23	BU5838 (800056)	BUSHING (5/8 OD X 3/8 ID)
24	W38F (788300)	3/8 SAE FLAT WASHER
25	N58CFL (785600)	5/8-11 FLANGE LOCK NUT

Base Model ACCR1360 comes with Spike Wheels, Side Treader Wheels, and without Smart Clean Cylinder.

Spike Wheel 44270 Hub Assemblies are 900178 (Right Hand) and 900179 (Left Hand)

Model ACCR1345

Shown with optional Razor Wheels. When ordering without Razor Wheels use **ACCR1345**
Add Z to specify Razor Wheels in place of standard Spike Wheel **ACCR1345Z.**

ACCR1345 Narrow Compact Clean Ride short Row Cleaner

4” Travel follows ground contours while maintaining optimum cleaning action at all elevations. Stop bolt can be adjusted to limit depth allowing row cleaner to float from that point upward. Compatible with Clean Sweep or Smart Clean(SC-CYL-2X2) cylinders **not** included in price. Cylinder mounting brackets included.
Designed to mount to most row units, Deere, Kinze, White, Harvest International and Horsch.
Can be fitted to Case IH row unit with additional Mounting Brackets (**900023**).
Case IH 1200 series requires qty 2 of **CIH1200ST** to limit row unit up travel (included in 900023).

*Patented

Exploded View- Model ACCR1345 Compact Clean Ride short Row Cleaner

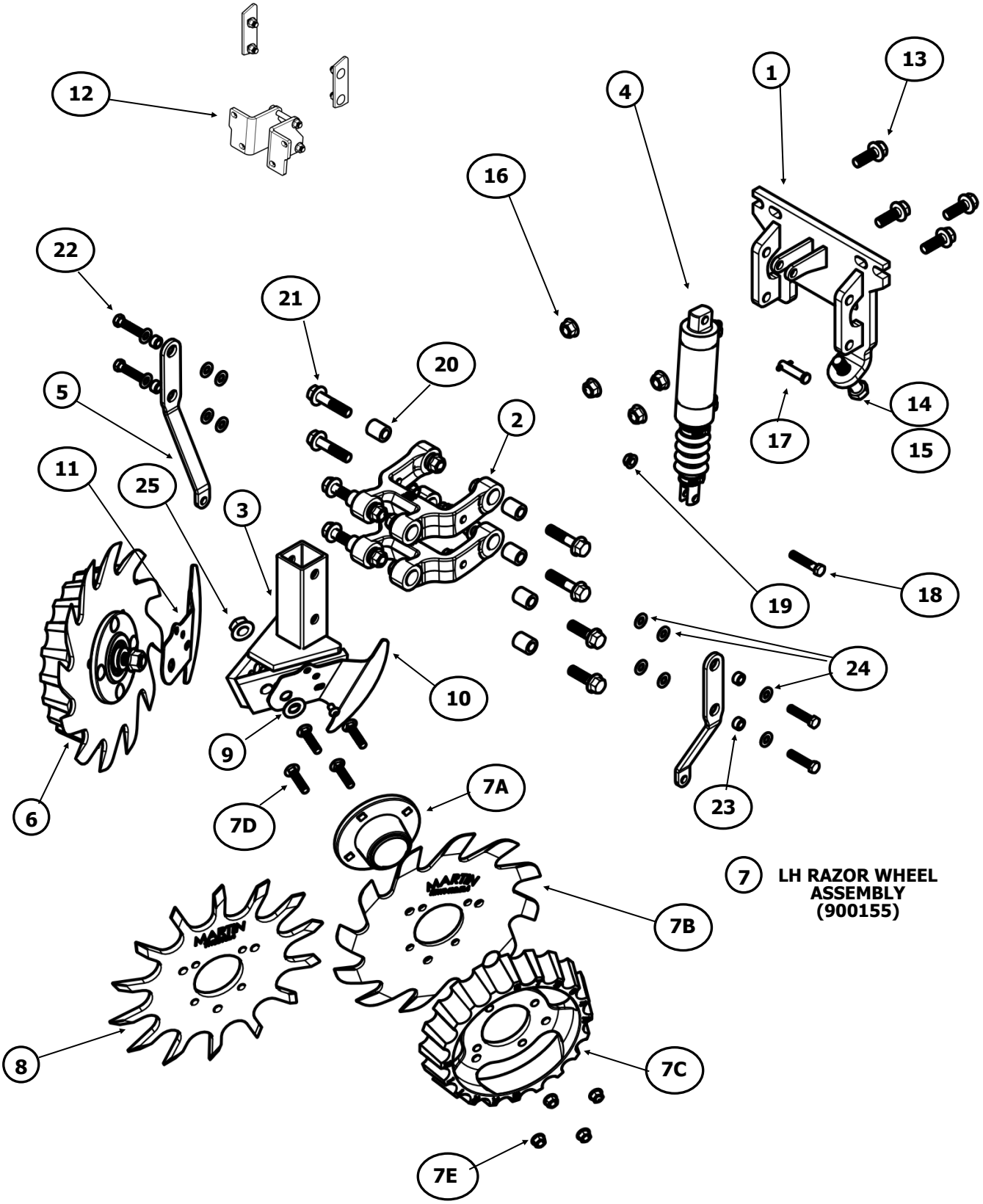

ITEM NO.	PART NUMBER	DESCRIPTION
1	MT1334CCR (900043)	CCR MOUNT 1360
2	CCRL5 (800320)	PARALLEL ARM
3	ACCR1345STEM (900029)	1345 STEM
4	SC-CYL-2X2 (800322)	SMART CLEAN CYLINDER
5	SC1360CCR (800069)	CCR SMART CLEAN BRACKET (800025 FOR CASE-IH 1200)
6	900156	13" RAZOR WHL W/ C HUB AND STW RH
7	900155	13" RAZOR WHL W/ C HUB AND STW LH
7A	CHU44C (900101)	C-HUB ASSEMBLY
7B	RTW1412.5-L4 (800287)	12.5" RAZOR WHEEL LH
7C	STW04A (800288)	SIDE TREADER WHEEL
7D	B5C38134 (782316)	3/8-16 X 1 3/4 CARRAIGE BOLT
7E	N38CFL (785300)	3/8-16 FLANGE LOCK NUT
8	TW3813L4 (800289)	13" SPIKE WHEEL
9	788601	5/8 SAE FLAT WASHER (SUBSTITUTE FOR SCRAPPERS)
10	ITD SCWL (800361)	LEFT SCRAPPER
11	ITD SCWR (800360)	RIGHT SCRAPPER
12	900023	MT PACKAGE FOR CASE IH 1200
13	B5F12NC112 (783514)	1/2-13 X 1 1/2 FLANGE BOLT
14	B5M58NC3 (784630)	5/8-11 X 3 TAP BOLT
15	N58CNLT (786601)	5/8-11 JAM NUT
16	N12FLN (785500)	1/2-13 FLANGE LOCK NUT
17	SC-TP716 (709011 &709010)	7/16" CLEVIS PIN AND COTTER PIN
18	B5M38NC2 (784320)	3/8-16 X 2 HEX BOLT
19	N38CNLT (786300)	3/8-16 NYLOCK NUT
20	BU7812 (800245)	PIVOT BUSHING (7/8 OD X 5/8 ID)
21	B5F12NC212 (783524)	1/2-13 X 2 1/2 FLANGE BOLT
22	B5M38NC134 (784316)	3/8-16 X 1 3/4 HEX BOLT
23	BU5838 (800056)	BUSHING (5/8 OD X 3/8 ID)
24	W38F (788300)	3/8 SAE FLAT WASHER
25	N58CFL (785600)	5/8-11 FLANGE LOCK NUT

Base Model ACCR1345 comes with Spike Wheels, Side Treader Wheels, and without Smart Clean Cylinder.

Spike Wheel C Hub Assemblies are 900152 (Right Hand) and 900153 (Left Hand)

Model WA1360

Shown with optional Side Treader Wheels (STW-04)
and Quick Adjust (CA-03D).

WA1360 Floating Row Cleaner follows ground contour. Stop bolt can be adjusted to limit depth allowing row cleaner to float from that point upward.

Mounting brackets available to fit Deere, Kinze, Case IH, White planters with or without OEM coulters on most models.

Also can be used with UMO-100 or 150 Fertilizer Opener

Optional Razor Wheels available for all 13” 4 bolt Row Cleaners. See page 17.

Exploded View- Model WA1360 Floating Row Cleaner

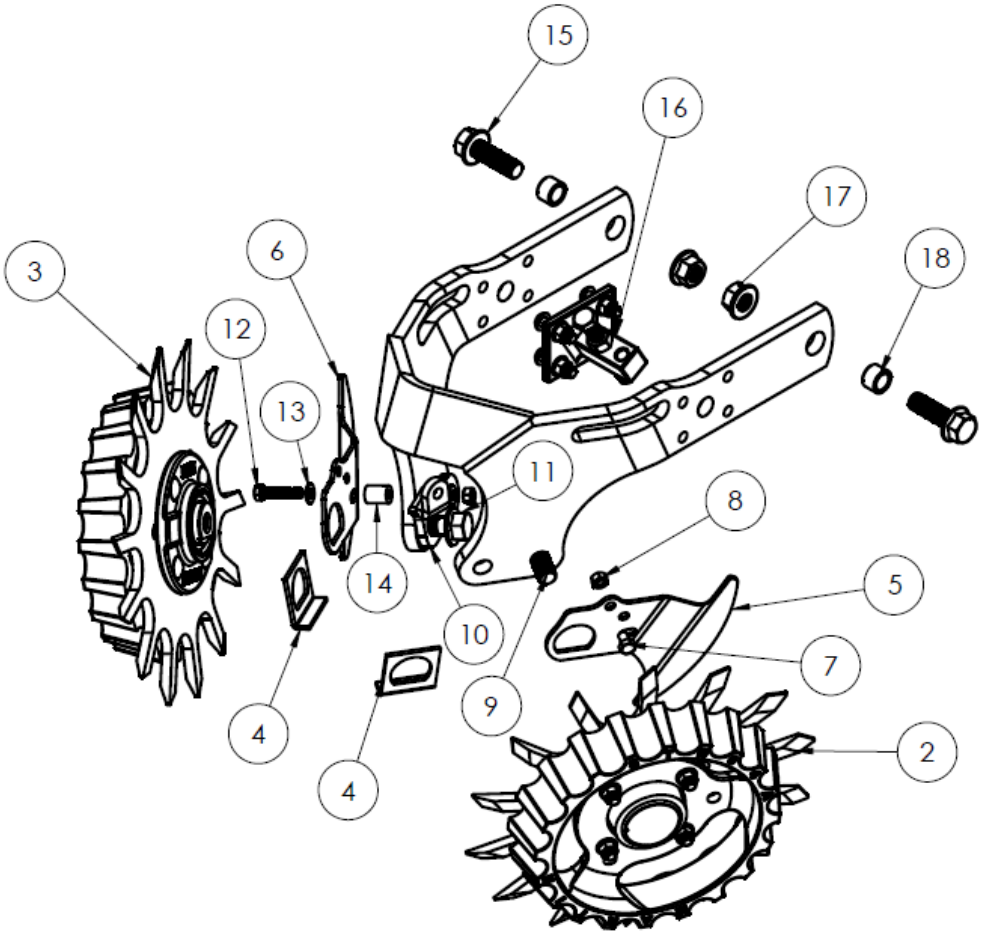

ITEM NO.	PART NUMBER	DESCRIPTION	QTY
1	FR1360 (900174)	1360 FRAME	1
2	ATW13L27044STW (900179)	LEFT TOOTHED WHEEL ASSEMBLY	1
3	ATW13R27044STW (900178)	RIGHT TOOTHED WHEEL ASSEMBLY	1
4	DLR-01 (800321)	D-LOCK (NOT USED WITH SCRAPPERS)	2
5	DLD-02L (800231)	LEFT SCRAPPER (SUBSTITUTE FOR D-LOCK)	1
6	DLD-02R (800230)	RIGHT SCRAPPER (SUBSTITUTE FOR D-LOCK)	1
7	B5M516NC12 (784214)	5/16-18 X 1/2" LONG HEX BOLT	2
8	N516CH (786200)	5/16-18 HEX NUT	3
9	B8F58NC112 (783614)	5/8-11 X 1 1/2" FLANGE PATCH BOLT	1
10	SC-1360FR-MT-R	SMARTCLEAN ANCHOR	1
11	B8F58NC134 (783616)	5/8-11 X 1 3/4" FLANGE PATCH BOLT	1
12	B5M516NC114 (784212)	5/16-18 X 1 1/4 HEX BOLT	1
13	W516 (788200)	5/16" WASHER	1
14	SC-FR-SPACER	5/8" BUSHING	2
15	B8F58NC2 (783620)	5/8-11 X 2 FLANGE BOLT	2
16	SB-01R	THREADED ADJUSTMENT RIGHT HAND	1
17	N58CFL (785600)	5/8-11 FLANGE LOCK NUT	2
18	BU7858 (800277)	BUSHING, PIVOT	2
19	ARTW125L27044STW (900097)	LEFT RAZOR WHEEL ASSEMBLY	1
20	ARTW125R27044STW (900098)	RIGHT RAZOR WHEEL ASSEMBLY	1

Model WA1345

Shown with optional Side Treader Wheels (STW-04)

WA1345 Narrow Floating Row Cleaner follows ground contour. Stop bolt can be adjusted to limit depth allowing row cleaner to float from that point upward.

Mounting brackets available to fit Deere, Kinze, Case IH, White planters without OEM coulters on most models.

Also can be used with UMO-100 or UMO 150 Fertilizer Openers.

Optional Razor Wheels available for all 13” 4 bolt Row Cleaners. See page 17.

Exploded View- Model WA1345 Floating Row Cleaner

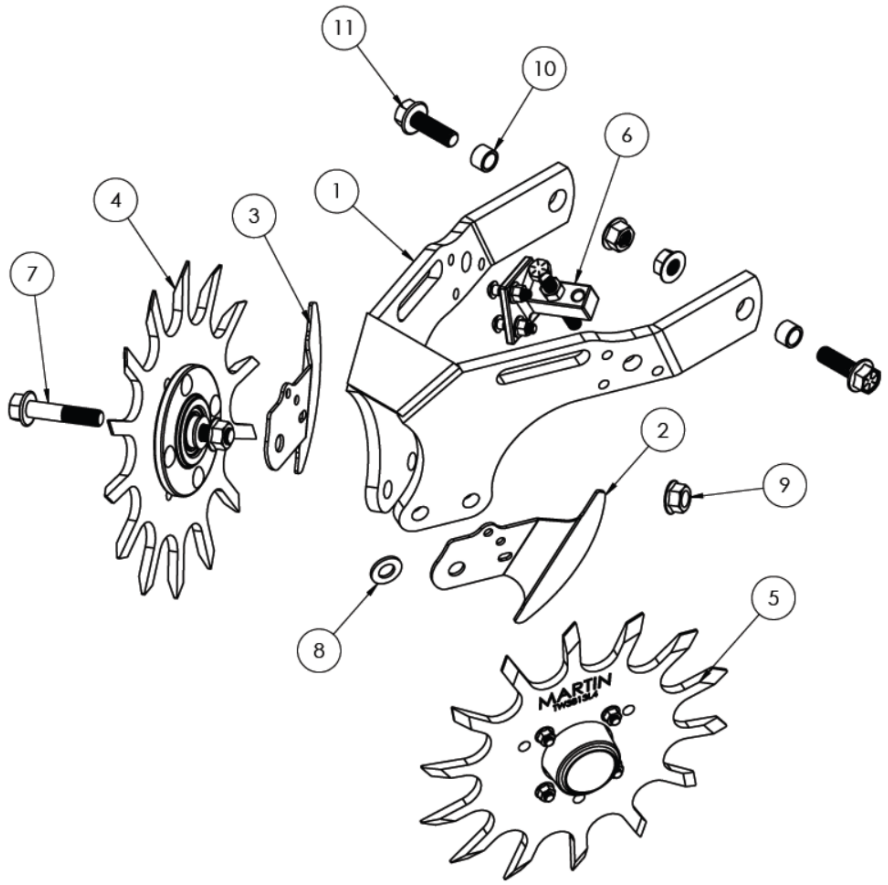

ITEM NO.	PART NUMBER	DESCRIPTION
1	1345FR (900007)	1345 FRAME
2	ITD SCWL (800361)	LEFT 1345 SCRAPPER
3	ITD SCWR (800360)	RIGHT 1345 SCRAPPER
4	900152	13" SPIKE C HUB ASSEMBLY STW RH
5	900153	13" SPIKE C HUB ASSEMBLY STW LH
6	SB02R	THREADED ADJUSTMENT RH
7	B8F58NC3 (783630)	BOLT, 5/8-11 X 3 FL GR8
8	788601	5/8 SAE FLAT WASHER (SUB IN PLACE OF SCRAPPERS)
9	N58CFL (785600)	5/8 FLANGE LOCK NUT
10	BU7858 (800277)	5/8 PIVOT BUSHING
11	B8F58NC2 (783620)	5/8-11 X 2 FLANGE BOLT

WA1345 Narrow Floating Row Cleaner base configuration comes with Spike Wheels without Side Treader Wheels.

Options include:
- Adding Cams for depth Adjustment (900160 (RH) or 900161 (LH))
- Adding Side Treader Wheels (800288)
- Changing to Razor Wheel Assemblies (900155 (LH) and 900156 (RH))
- Adding Smart Clean Cylinder and Brackets
- It is suggested to run half of planter Left Leading and half Right Leading.
- Can run intersecting Wheels.

WA1360 Mounts

MT1360DS

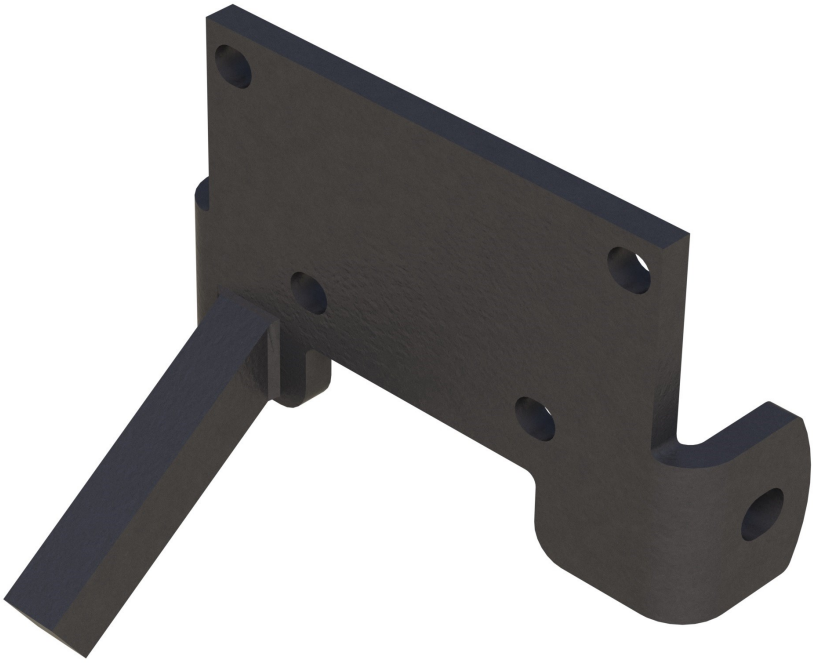

Short mounting bracket for attaching the **Martin WA1360 Floating Row Cleaner** to Deere 7200-1700 series planter row unit.

MT1360KS/WS

Short mounting bracket for attaching the **Martin WA1360 Floating Row Cleaner** to all Deere, Kinze (except 4900) and White planter row units, except Deere 7200 (ME2) and newer with short parallel linkage.

WA1360 Mounts

MT1360CIH

Bracket for attaching **Martin WA1360 Floating Row Cleaner** to Case IH 800, 900 and 1200 series planter row units.

WA1360 Mounts

MT1360K4C

Bracket set for attaching **Martin WA1360 Floating Row Cleaner** to Kinze 4900 series that have Kinze double arm no-till coulter.

MT1360K4

Short mounting bracket for attaching the **Martin WA1360 Floating Row Cleaner** to Kinze 4900 series planter row unit.

WA1360 Mounts

MT1360DC

Bracket set for attaching **Martin WA1360 Floating Row Cleaner** to Deere 7200-1700 series cast coulter bracket.

MT1360KC

Bracket set for attaching **Martin WA1360 Floating Row Cleaner** to all Kinze planter row units that have the Kinze double arm no-till coulter, except 4900.

Razor Wheels

RTW1412.5R4

12.5” Razor Tooth Row Cleaner wheel for use in extreme residue. Fits all Martin 4 Bolt Row Cleaners. Can be run offset or intersected. (Right Wheel)

**Add Z to end of part number to substitute Razor Wheels on any 13” Row cleaner

Patented

RTW1412.5L4

12.5” Razor Tooth Row Cleaner wheel for use in extreme residue. Fits all Martin 4 Bolt Row Cleaners. Can be run offset or intersected. (Left Wheel)

**Add Z to end of part number to substitute Razor Wheels on any 13” Row cleaner

Patented

Smart Clean™ System

We offer everything you need to equip your planter with the Smart Clean Row Cleaner Adjustment System, including:

- **Plumbing box with wiring harness**
- **Your choice of 4 types of Smart Clean assemblies.**
- **Air lines and fittings**
- **Air compressor**
- **Cylinders and brackets**
- **Easy-to-follow assembly instructions**

***Patented**

SC-CYL-2x2

(800322)

SC-AC-12V

12 Volt Compressor

Smart Clean™ System

Dial-in row cleaner adjustments on the go with an easy-to-use app for smart phones and tablets.

Combining a Bluetooth connection with an easy-to-use app for your smart phone or tablet, our new Smart Clean System® allows you to raise and lower your row cleaners by varying the amount of air pressure in the cylinders. A directional control valve lets you select up, down or float without requiring any air lines or manual valves in the cab. If your planter is equipped with airbags and you order Smart Clean® with the optional second valve, you can adjust the airbag downforce with your smart phone or tablet.

The app is a free download from Google Play or the App store. On the main page, you can adjust the downforce on the row cleaners by increasing or decreasing the Smart Clean Pressure.

*Patented

Smart Clean™ System

Control/Plumbing Box

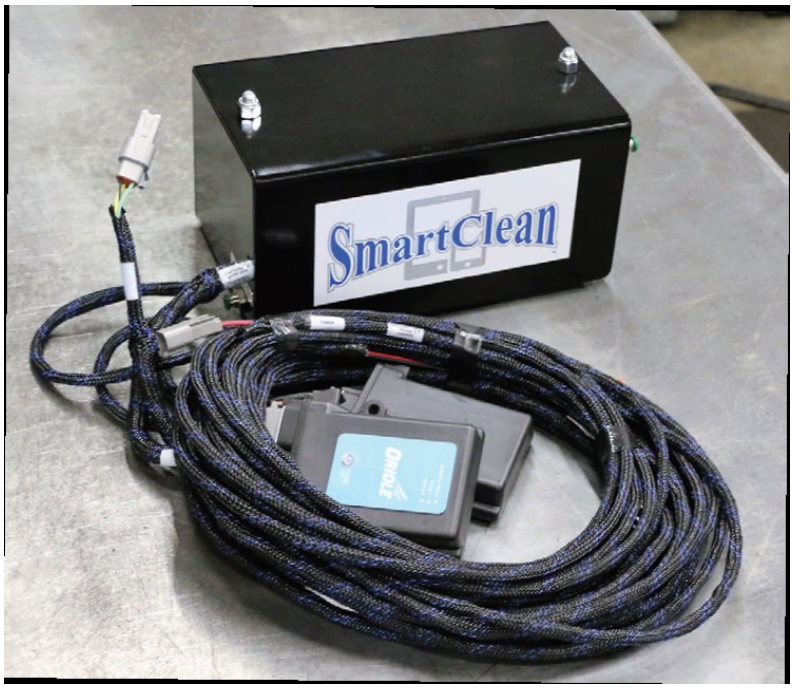

The plumbing box (SC-ASSEMBLY-1) connects wirelessly to your smart phone and allows you to control the row cleaner's downforce by controlling the cylinder's air pressure . The control box includes one pressure regulator valve, one directional valve , signal converter box , ORI-OLE controller box , and an external air filter/regulator.

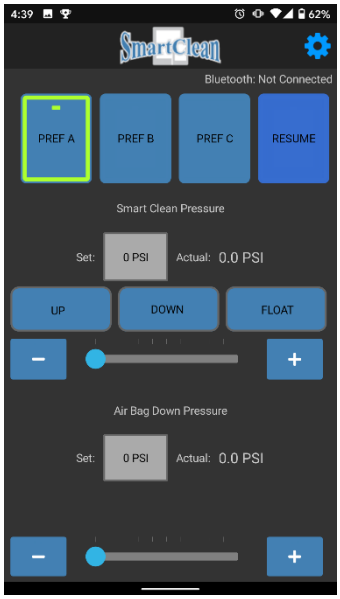

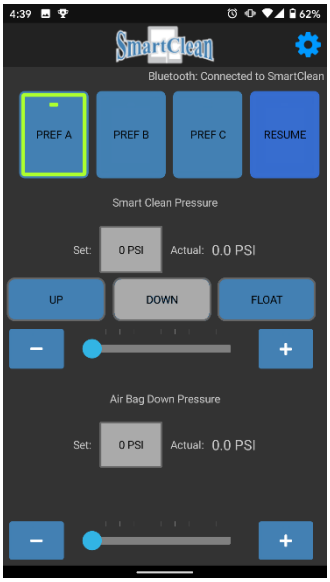

If your planter is equipped with airbags and you ordered the optional double valve plumbing box with additional airbag valve (SC-ASSEMBLY-2), connect the box's "Airbag" outlet to the airbags circuit using the provided 1/4" tubing and fittings. This will enable you to adjust the airbag down-force with your smartphone or tablet.

Smart Clean™ System

SC-1360DS-MT

Top Smart Clean Cylinder Bracket for MT1360DS.
Attaches SC-CYL-2x2 Cylinder to Mount.

SC-1360KS-MT

Top Smart Clean Cylinder Bracket for MT1360KS/WS.
Attaches SC-CYL-2x2 Cylinder to Mount.

SC-1360DC-MT

Top Smart Clean Cylinder Bracket for MT1360DC. Attaches SC-CYL-2x2 Cylinder to Mount.

Smart Clean™ System

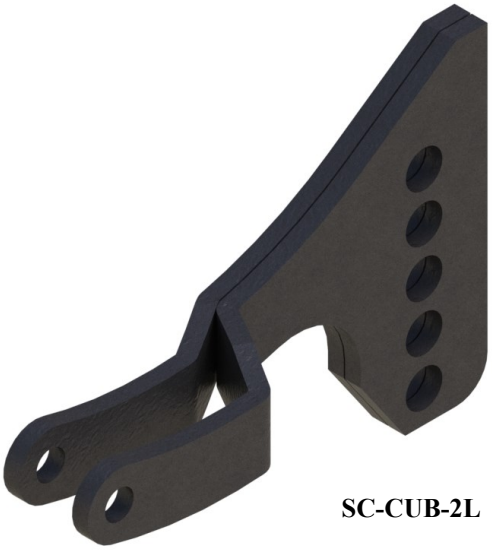

SC-CUB-2L

WA1360 Top Smart Clean Cylinder Bracket for MT1360DU, MT1360KU, MT1360DDU or MT1360KDU. For use with Right Leading UMO-100. Attaches SC-CYL-2x2 Cylinder to Mount.

FOR MT1360CU, use SC–CUB-2L CU (900259)

SC-CUB-2R

WA1360 Top Smart Clean Cylinder Bracket for MT1360DU, MT1360KU, MT1360DDU or MT1360KDU. For use with Left Leading UMO-100. Attaches SC-CYL-2x2 Cylinder to Mount.

FOR MT1360CU, use SC–CUB-2L CU (900260)

SC-CUB1345-2L

WA1345 Top Smart Clean Cylinder Bracket for MT1360DU, MT1360KU, MT1360CU. For use with Right Leading UMO-100. Attaches SC-CYL-2x2 Cylinder to Mount.

SC-CUB1345-2R

WA1345 Top Smart Clean Cylinder Bracket for MT1360DU, MT1360KU, MT1360CU. For use with Left Leading UMO-100. Attaches SC-CYL-2x2 Cylinder to Mount.

Smart Clean™ System

Smart Clean Lower Cylinder Bracket
for FR1360.

SC-1360FR-MT-R

SC-1360FR-MT-L

The Martin-Till Smart Clean™ System fits all major planter brands, including:

- **Case-IH**
- **Great Plains**
- **John Deere**
- **Kinze**
- **White**

***Patented**

UMO-150 Fertilizer Opener

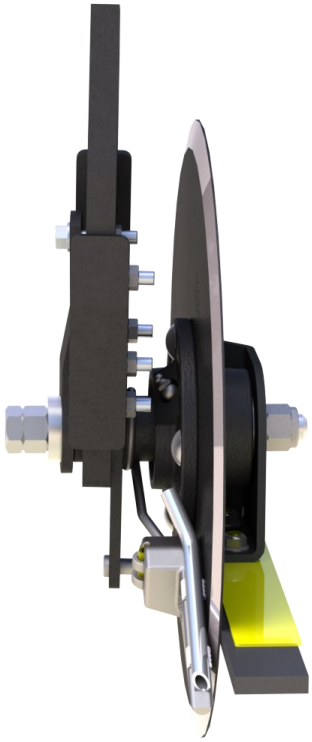

Martin New Unit mounted single disk liquid fertilizer opener. Can be used with Martin WA1360 Row Cleaner, WA1345, C125MTR, C125MTL or C125MTXL floating row cleaners. Fits Deere 7000 - 1700 series planters, Kinze, White 6000 & 8000 series planters. Can be set to place liquids 1”, 2” or 3” from center of seed row. Can also be set to place liquid 3/4” above, even with or 3/4” below seed depth.

Approximate weight: 32 lbs.

Can be ordered with Smooth Blade as UMO150 (R/L) or with Notched Blade (800249) as UMO150N (R/L).

Exploded View-UMO-150

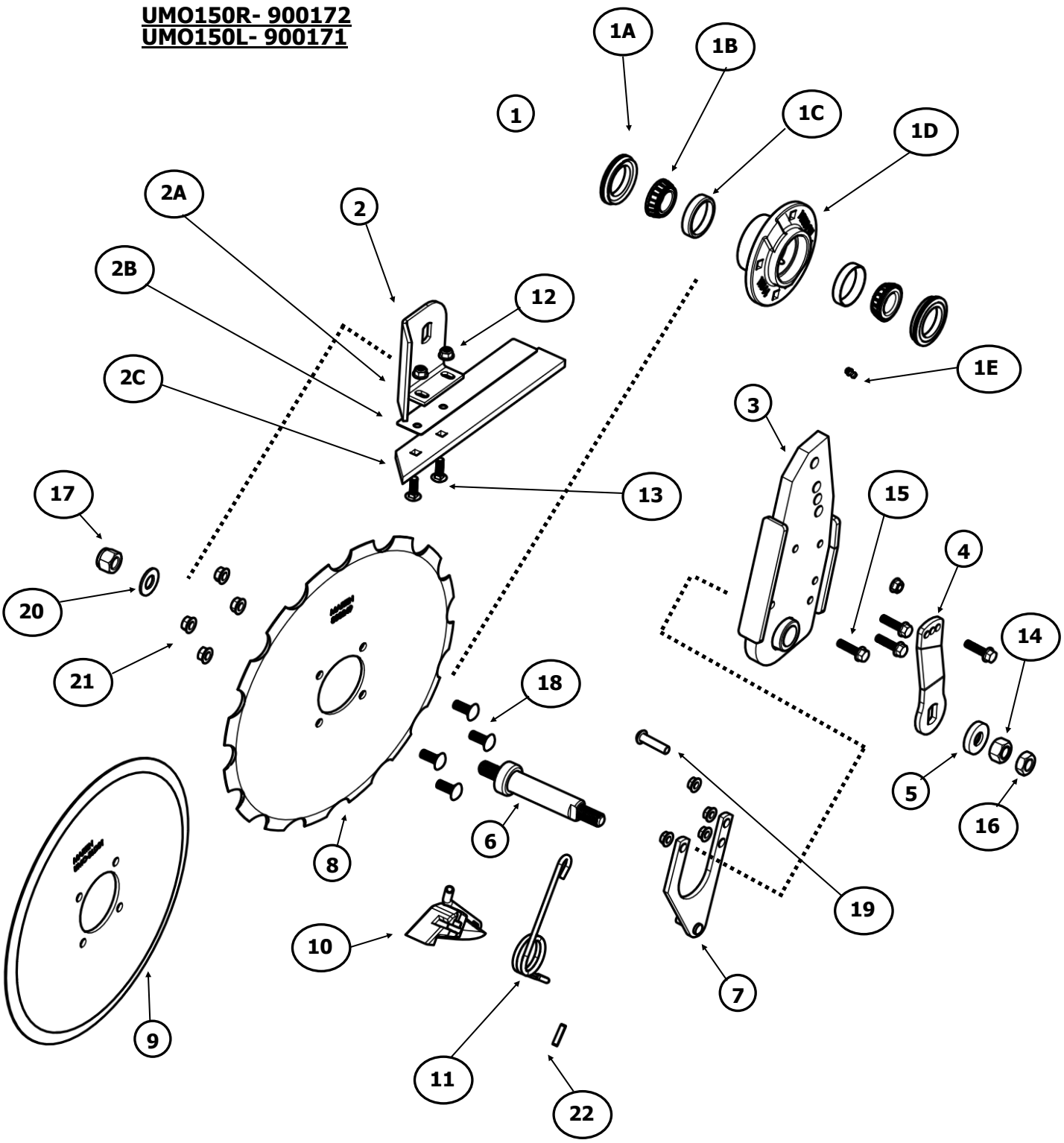

* Right hand unit shown.

ITEM NO.	PART NUMBER	DESCRIPTION
1	CHU44F (900166)	HU44 F HUB ASSEMBLY
1A	CR14971 (800285)	TRIPLE LIP SEAL
1B	L44643 (800284)	BEARING
1C	L44610 (800283)	BEARING RACE
1D	HU44-F (800272)	F HUB
1E	709001	1/4-28 GREASE ZERK FITTING
2	UMO-FCA100R/L (900170/169)	FURROW CONTROL ASSEMBLIES (RH/LH)
2A	UMO-FCB01R/L (800280/281)	FURROW CONTROL MOUNT (RH/LH)
2B	UMO-FCS02 (800276)	REINFORCEMENT STRAP
2C	UMO-FCS01 (800275)	FURROW CONTROL STRAP
3	900022/21	UMO150 BEAM RH/LH
4	UMO-FC101R/L (800252/251)	FURROW CONTROL LEVER
5	UMO-032 (800282)	TRANSITION WASHER
6	UMO-031 (800273)	UMO AXLE
7	900176/175	UMO FOOT STOP RH/LH
8	UMO-BLD02 (800249)	15” NOTCHED BLADE (OPTIONAL)
9	UMO-BLD01 (800319)	14” SMOOTH BLADE
10	UMO-041R/L (900168/167)	LIQUID FERTILIZER SHOE RH/LH
11	UMO-SPG01R/L (800278/279)	UMO SPRING RH/LH
12	N516FLN (785200)	5/16-18 FLANGE LOCK NUT
13	BSCS161 (782210)	5/16-18 X 1 CARRIAGE BOLT
14	N58CHY (786600)	5/8-11 HEX NUT
15	B8F516NC114 (783212)	5/16-18 X 1 1/4 FLANGE BOLT
16	N58CNLT (786601)	5/8-11 JAM NUT
17	N58CNL (787600)	5/8-11 NYLOC NUT
18	BSC381 (782310)	3/8-16 X 1 CARRIAGE BOLT
19	B5B516114 (781212)	5/16-18 X 1 1/4 BUTTON HEAD BOLT
20	787601	5/8 SAE FLAT WASHER
21	N38CFL (785300)	3/8-16 FLANGE LOCK NUT
22	709003	1/4” DOUBLE ROLL PIN

Basic Umo150 comes with Smooth Blade (Item 9 from above).

UMO-100 Fertilizer Opener

U.S. PATENT NO # 7,481,171

Unit mounted single disk liquid fertilizer opener. Can be used with Martin WA1360 Row Cleaner, WA1345, C125MTR, C125MTL or C125MTXL floating row cleaners. Fits Deere 7000 - 1700 series planters, Kinze, White 6000 & 8000 series planters. Can be set to place liquids 1”, 2” or 3” from center of seed row. Can also be set to place liquid 3/4” above, even with or 3/4” below seed depth.

Approximate weight: 34 lbs.

Exploded View-UMO-100

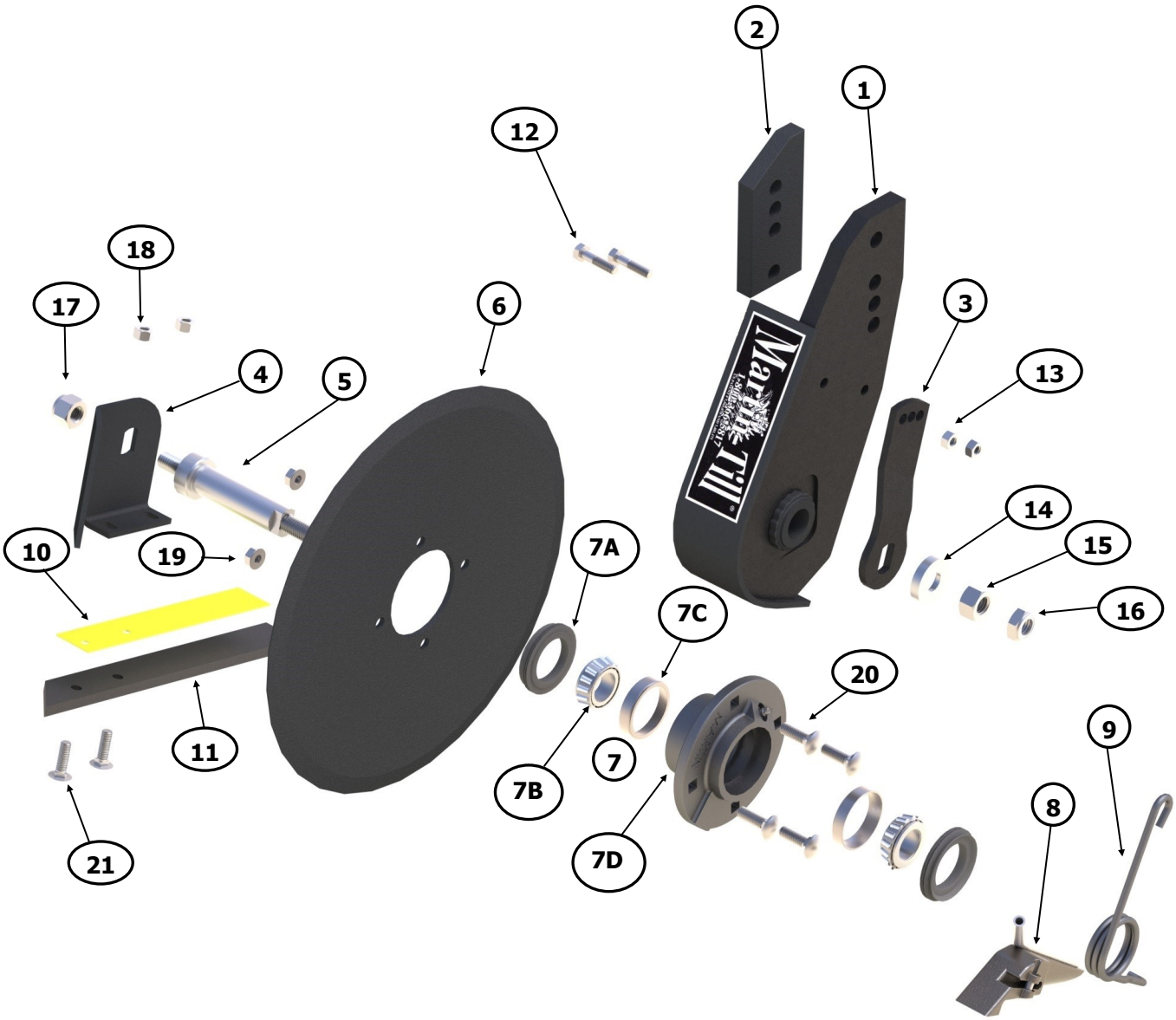

* Right hand unit shown.

ITEM NO.	PART NUMBER	DESCRIPTION
1	UMO-MSB01R/L	UMO BEAM RH/LH
2	UMO 12 (800306)	UMO SPACER
3	UMO-FCL01R/L (800252/253)	FURROW CONTROL LEVER RH/LH
4	UMO-FCB01R/L (800280/281)	FURROW CONTROL MOUNT RH/LH
5	UMO-A77	UMO100 AXLE
6	UMO-BLD01 (800319)	14” SMOOTH BLADE
7	CHU44F (900166)	HU44 F HUB ASSEMBLY
7A	CR14971 (800285)	TRIPLE LIP SEAL
7B	L44643 (800284)	BEARING
7C	L44610 (800283)	BEARING RACE
7D	HU44-F (800272)	F HUB
8	UMO-041R/L (900168/167)	LIQUID FERTILIZER SHOE RH/LH
9	UMO-SPG01R/L (800278/279)	UMO SPRING RH/LH
10	UMO-FCS02 (800276)	REINFORCEMENT STRAP
11	UMO-FCS01 (800275)	FURROW CONTROL STRAP
12	B5F516NC112 (783214)	5/16-18 X 1 1/2 FLANGE BOLT
13	N516FLN (785200)	5/16-18 FLANGE LOCK NUT
14	UMO-032 (800282)	TRANSITION WASHER
15	N58CHY (786600)	5/8-11 HEX NUT
16	N58CNLT (786601)	5/8-11 JAM NUT
17	N58CNL (787600)	5/8-11 NYLOC NUT
18	N516FLN (785200)	5/16-18 FLANGE LOCK NUT
19	N38CFL (785300)	3/8-16 FLANGE LOCK NUT
20	BSC381 (782310)	3/8-16 X 1 CARRIAGE BOLT
21	BSCS161 (782210)	5/16-18 X 1 CARRIAGE BOLT

Mounts for UMO-100

UMO-MTA

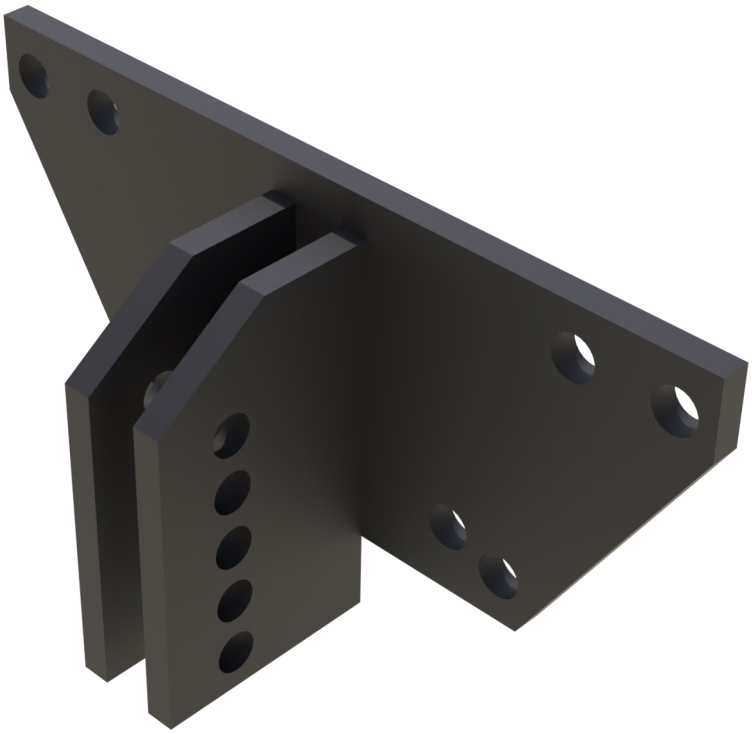

Mounting bracket for John Deere 7000, 7100 and Kinze series planters. Approximate weight: 6.3 lbs.

UMO-MTJ

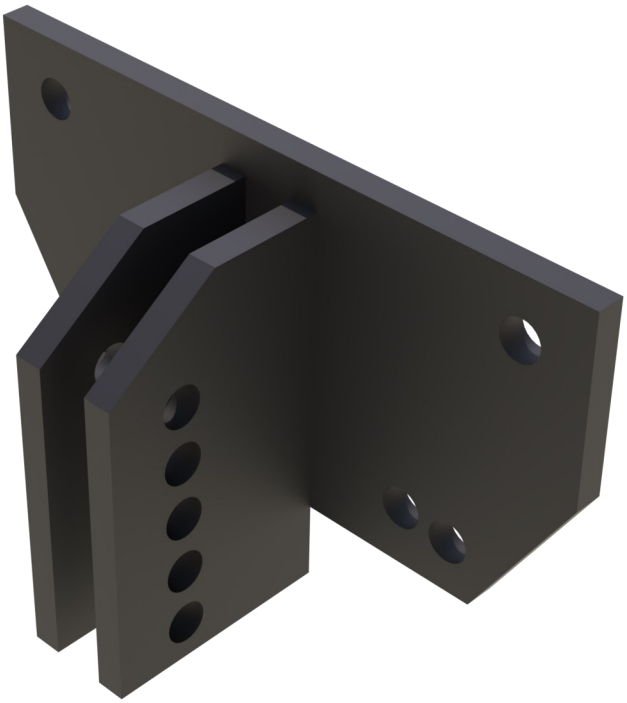

Mounting bracket for all John Deere 7200, 7300, 1700 series planters. Approximate weight: 5.9 lbs.
.

WA1360/UMO-100 Mounts

MT1360DU

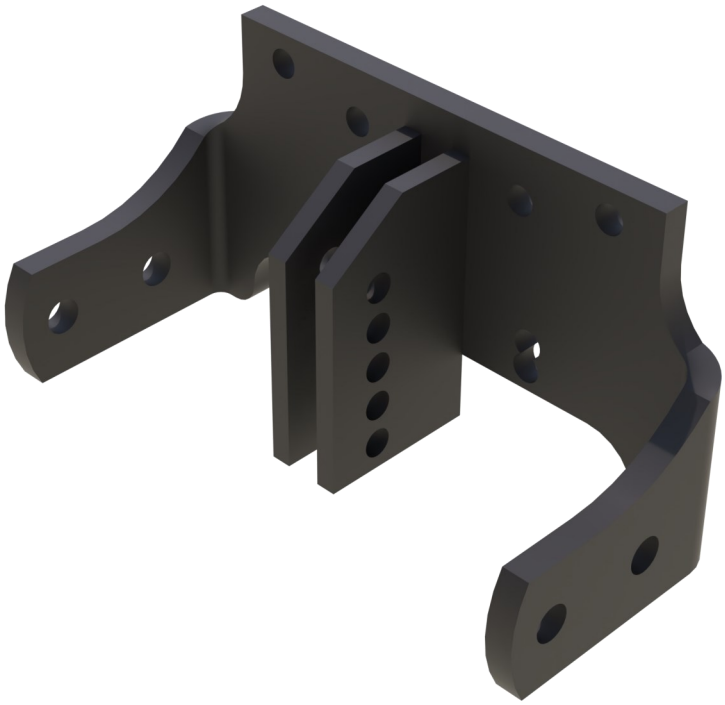

Bracket for attaching **Martin UMO-100/150 Fertilizer Opener and Martin WA1360 Floating Row Cleaner** to Deere 7200-1700 and CIH 2000(Requires HD adaptor, CNH part # 48054385) series row units.

MT1360KU/WU

Bracket for attaching **Martin UMO-100/150 Fertilizer Opener and Martin WA1360 Floating Row Cleaner** to Kinze (except 4900) White and Deere 7000 planter row units.

WA1360/UMO-100 Mounts

MT1360CU

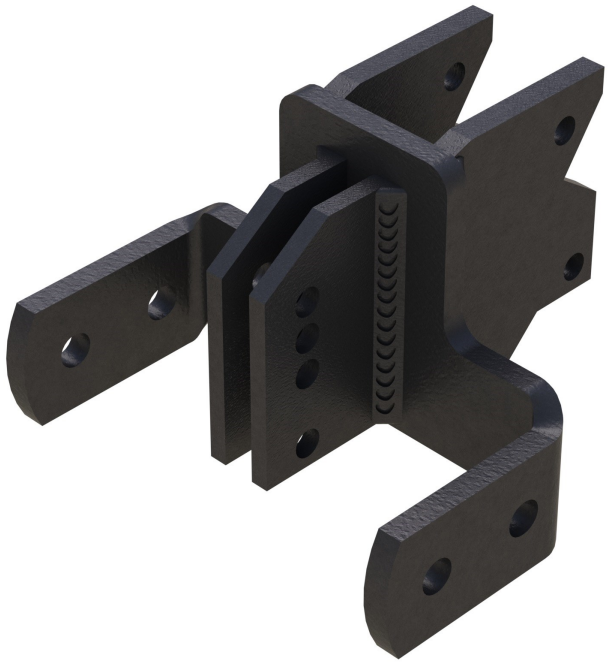

Bracket for attaching **Martin UMO-100/150 Fertilizer Opener and Martin WA1360 Floating Row Cleaner** to CIH 1200 & 2000 series row units.

HDP-CIH01

Heavy duty lower parallel arm for CIH 1200 series row units. For use in extreme No-Till environments.

UMO-150 Dual Fertilizer Opener

Dual Unit mounted single disk liquid fertilizer opener. Can be used with Martin WA1360 Row Cleaner. Fits Deere 7000 - 1700, Kinze & Case IH Early Riser row units. Set to place liquid or dry fertilizer 2 5/8” from center of seed row and at seeding depth.

• 2 - 14” smooth blades or 15” Notched Blades for easy Penetration

• Tapered roller bearing hubs for Durability

• New and improved placement shoe for less friction

WA1360/Dual UMO-100 Mounts

MT1360DDU

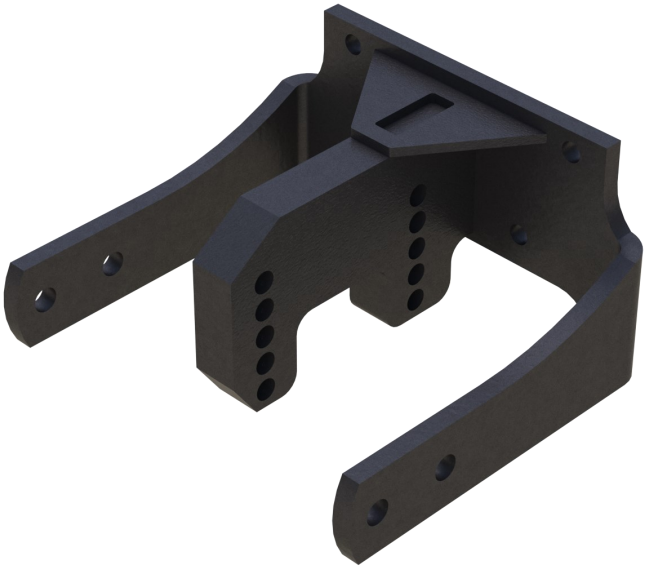

Bracket for attaching **Dual Martin UMO- 100 Fertilizer Opener and Martin WA1360 Floating Row Cleaner** to Deere 7200-1700 series and CIH 2000 (Requires HD adaptor, CNH part # 48054385) planter row units.

MT1360KDU

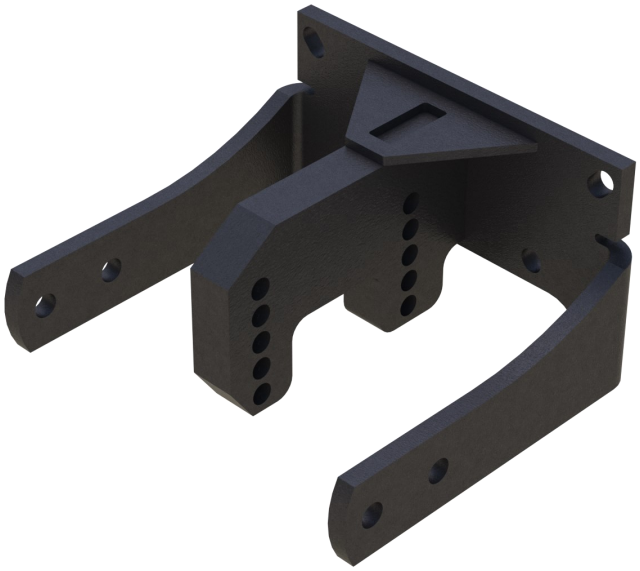

Bracket for attaching **Dual Martin UMO-100 Fertilizer Opener and Martin WA1360 Floating Row Cleaner** to Kinze (except 4900), White and Deere 7000 planter row units.

WA1360/Dual UMO-100 Mounts

DUAL UMO 1360

Dual Umo 1360 with WA1360 Wheel Assembly.

Fits Deere 7000 - 1700, Kinze & Case IH Early Riser row units.

Set to place liquid or dry fertilizer 2 5/8" from center of seed row and at seeding depth.

Options include:
- Spike or Razor Wheels
- Side Treader Wheel
- Cam Adjust or Threaded Adjust Block
- With or Without Smart Clean

DUAL UMO 1345

Dual Umo 1345 with WA1345 Wheel Assembly for Narrow Row Cleaning.

Fits Deere 7000 - 1700, Kinze & Case IH Early Riser row units.

Set to place liquid or dry fertilizer 2 5/8" from center of seed row and at seeding depth.

Options include:
- Spike or Razor Wheels
- Side Treader Wheel
- Cam Adjust or Threaded Adjust Block
- With or Without Smart Clean

Model WA1360

WA1360 FLOATING SERIES

WA1360 Mounting Bracket Choices

	w/o Coulter	w/Coulter	w/UMO	w/Dual UMO
Length	**19”**	**22”**	**25”**	**31”**
Width	**12 7/16”**	**12 7/16”**	**12 7/16”**	**12 7/16”**
Standard Wheel Diameter	**13**	**13**	**13**	**13**
Average Path Width	**7**	**7**	**7**	**7**
Axle Type	**Bolt on**	**Bolt on**	**Bolt on**	**Bolt on**
Standard Adj. Method	**Stop bolt**	**Stop bolt**	**Stop bolt**	**Stop bolt**
Optional Adj. Method	**Smart Clean Cam**	**Smart Clean Cam**	**Smart Clean Cam**	**Smart Clean Cam**
Floats	**Yes**	**Yes**	**Yes**	**Yes**
<u>May be used with:</u>				
Martin unit mounted single Disk & Dual opener	**Yes**	**No**	**Yes**	**Yes**
JD frame mounted single disk fertilizer opener	**Yes**	**No**	**No**	**No**
Unit mounted no-till coulters (except Ausherman)	**No**	**Yes**	**No**	**No**
Unit mounted single disk fertilizer injection systems	**No**	**No**	**No**	**No**
JD unit mounted double disk fertilizer opener	**No**	**Yes***	**No**	**No**
Side Treader Wheels	**Recommend**	**Recommend**	**Recommend**	**Recommend**

Cast Threaded Adjustment

SB01 RH/LH

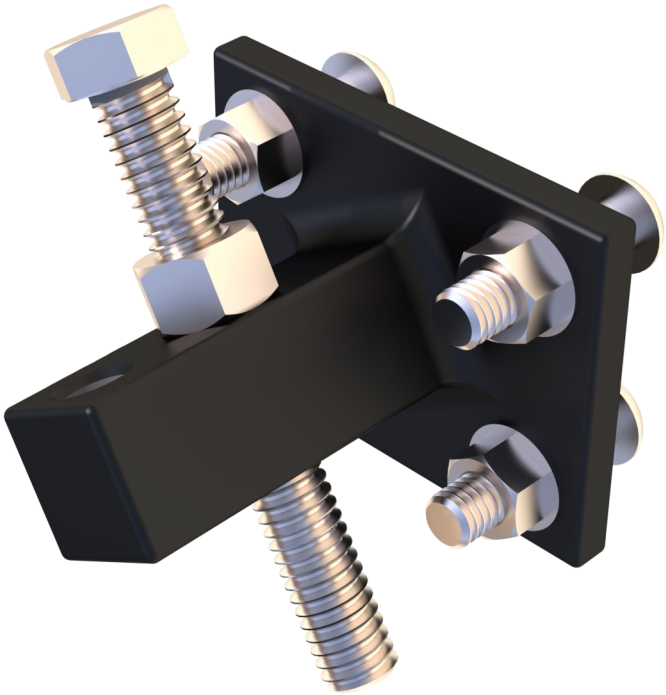

Threaded Depth Adjustment for WA1360

Adjust depth by moving Jam Nut.

Available as an alternative to Cam Assembly.

SB02 RH/LH

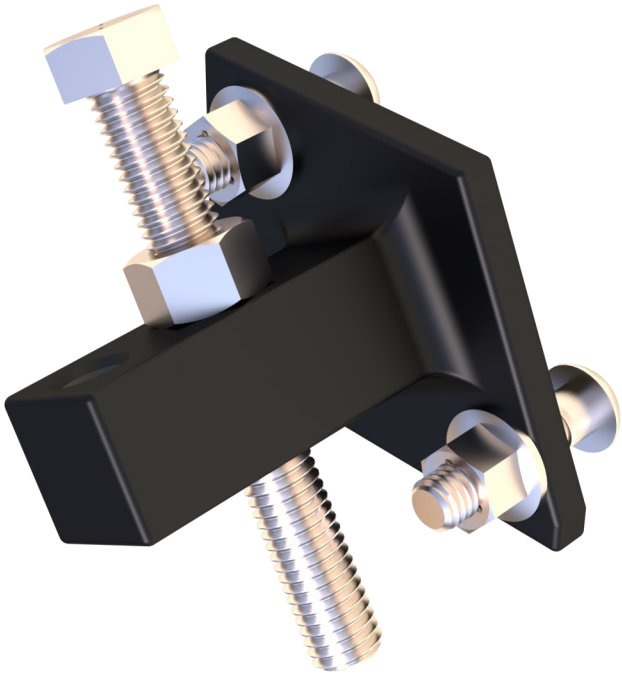

Threaded Depth Adjustment for WA1345

Adjust depth by moving Jam Nut.

Available as an alternative to Cam Assembly.

Cam Adjust for WA1360

CA-03D

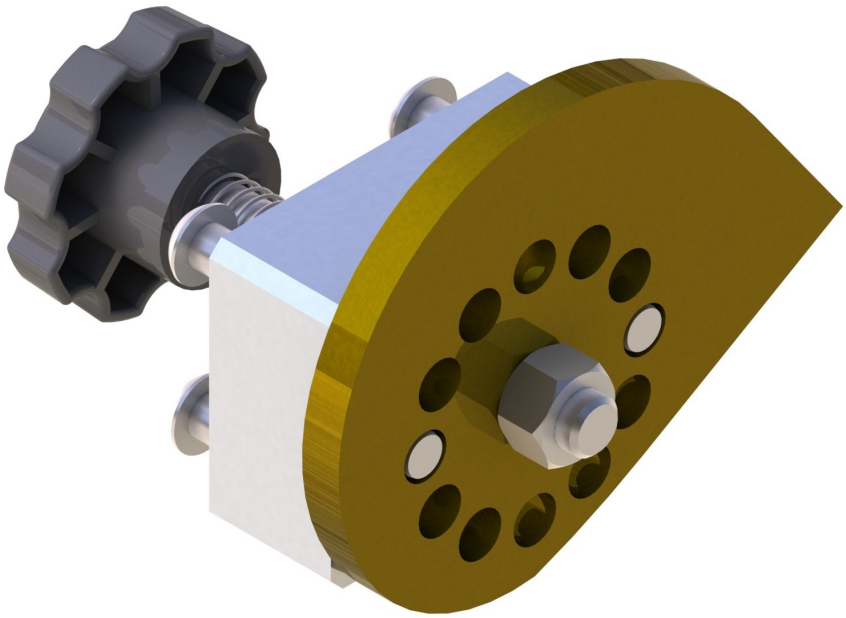

Spring Loaded Quick Adjust for WA1360.

Adjust depth in 1/4” increments.

CA-03K

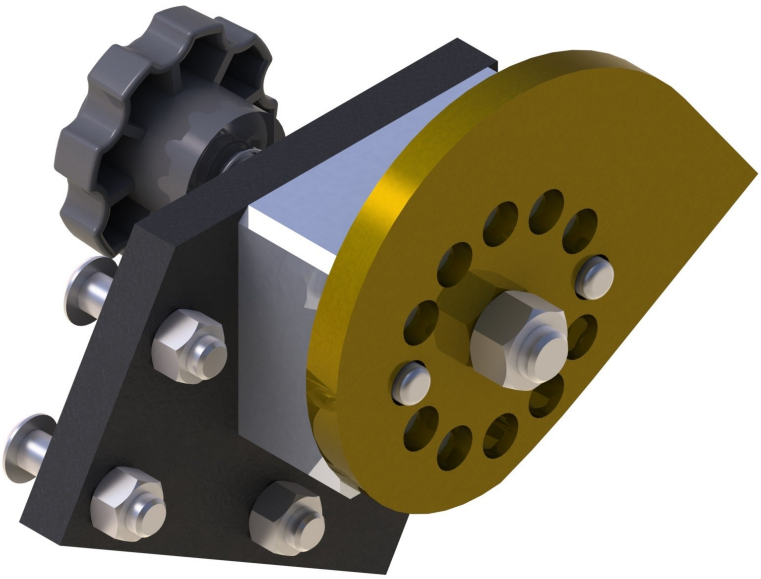

Spring Loaded Quick Adjust for MT1360KC on Kinze Unit with Coulter.

Adjust depth in 1/4” increments.

Exploded View-Cam Adjust for WA1360

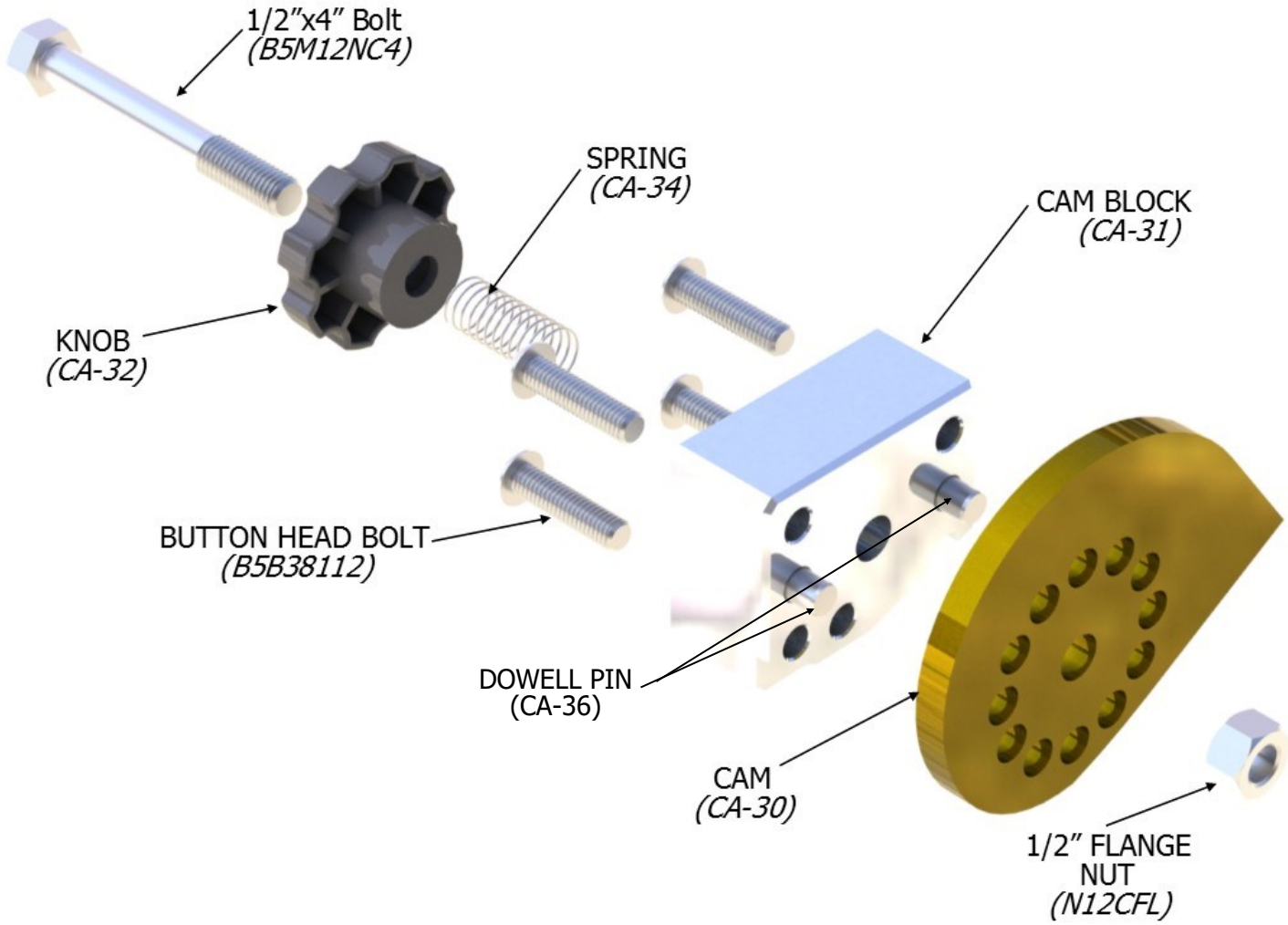

Exploded View-Cam Adjust for WA1345

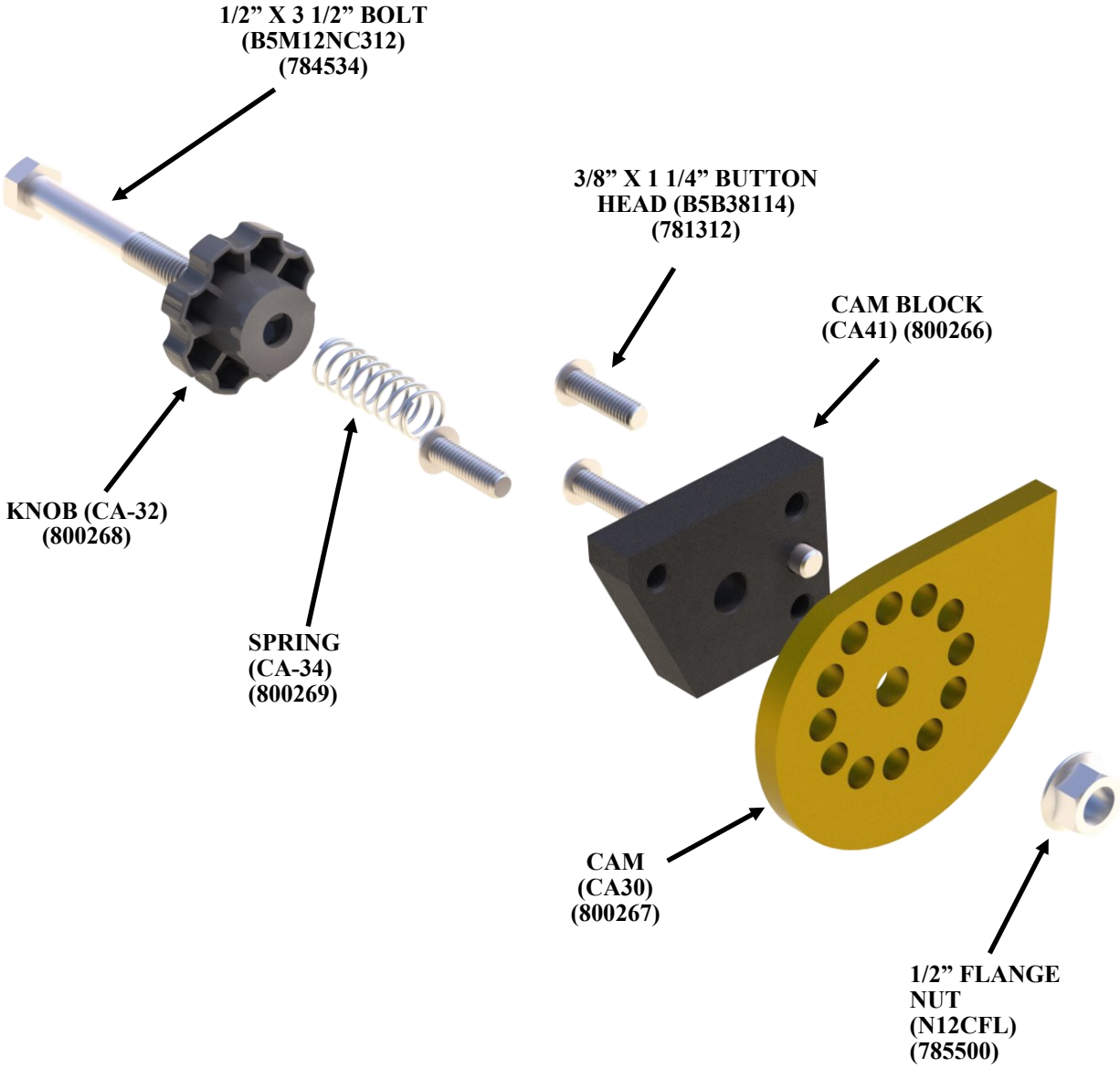

Side Treader Wheel

STW-04A

Optional aluminum side treader wheel for use on all Martin floating row cleaners to improve flotation and increase traction. Two required per row. Fits three and four bolt hubs. Approximate weight: 4.5 lbs.

OPTIONS

WW-02

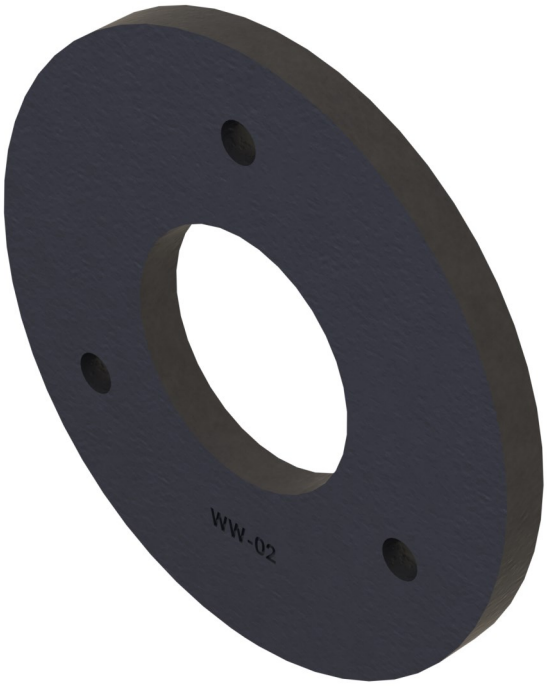

Wheel weight. Adds weight to floating row cleaners. For use when planting in extremely hard soil conditions. Two required per row. Fits three-bolt hub. Approximate weight: 4.3 lbs. each.

WW-04

Wheel weight. Adds weight to floating row cleaners. For use when planting in extremely hard soil conditions. Two required per row. Fits four-bolt hub. Approximate weight: 4.3 lbs. each.

OPTIONS

USB-70

Unit set back kit for JD7000 and Kinze. Moves planter unit back 6”. Includes bolts for attaching and 12” of #41 roller chain plus connector. Approximate weight: 27 lbs.

Pin Adjust Row Cleaners

WA1532

Stem mounted row cleaner. 1 1/2” stem with bolt-on axles.
WA1532 has 15” wheels; runs intersected (most aggressive). WA1332 has 13” wheels; runs intersected, offset or retracted.
Mounting brackets not included.
Components: (1) 1315STEM, (2) HA44270, EITHER (1-TW3813-L4 AND 1-TW3813-R4) OR (1-TW3815-L4 AND1-TW3815-R4) and (1) Lift assist handle.

Attaches to planter with one of the following mounts:
-MT772 Fits Deere7000-1700 series, all Kinze, White 6000 series.
With standard down pressure springs.
- MT512 Fits White 5100.
- MT610 Fits White 6100 series with heavy duty down pressure springs.
- MT385 Fits Deutz AC Quadra Disk, Landoll.
- MT810 Fits White 8000.
- MT4772 Fits Kinze 4900.

*Patented

Exploded View-WA1332 Row Cleaner

WA1332

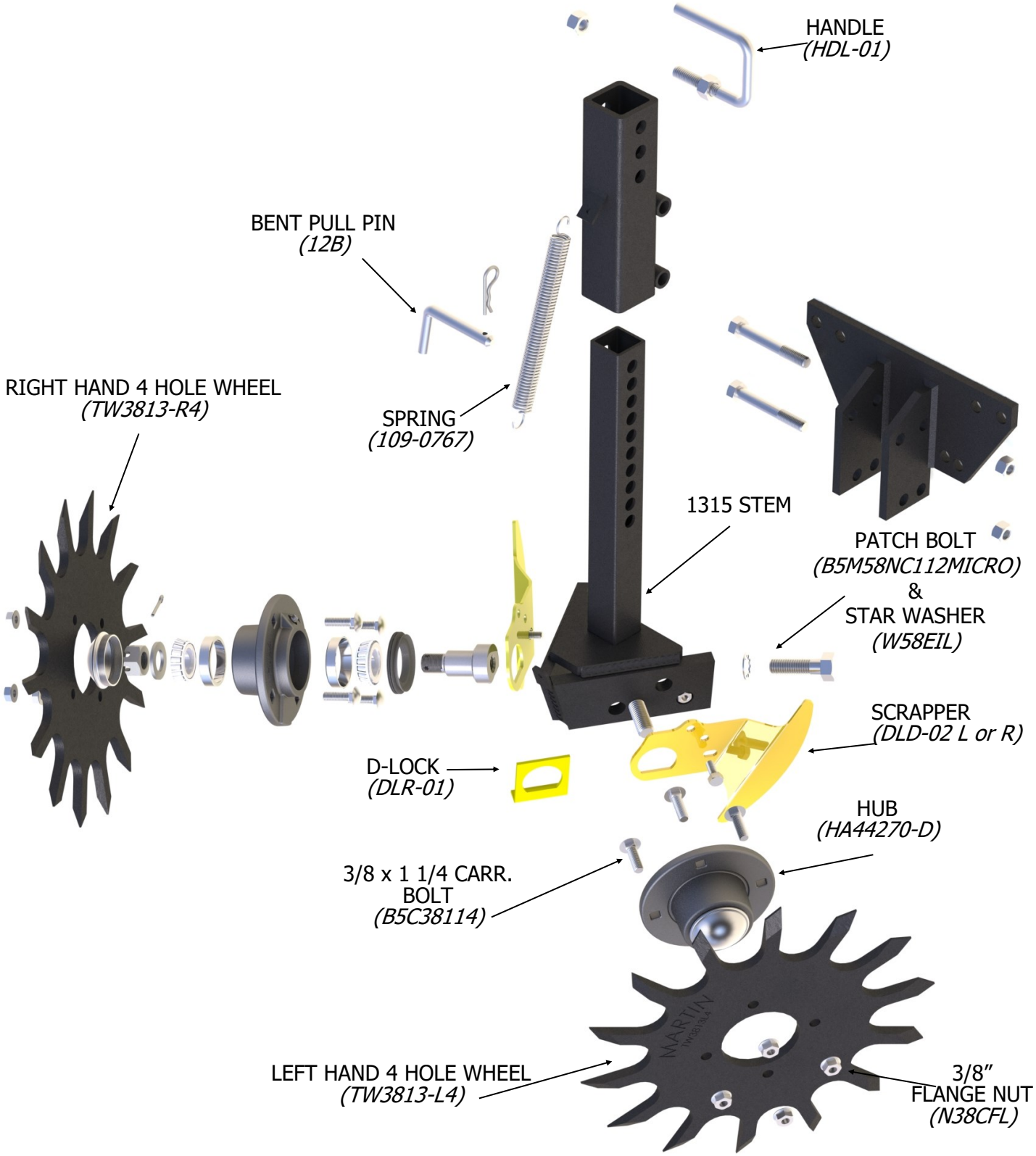

Exploded View-WA1532 Row Cleaner

WA1532

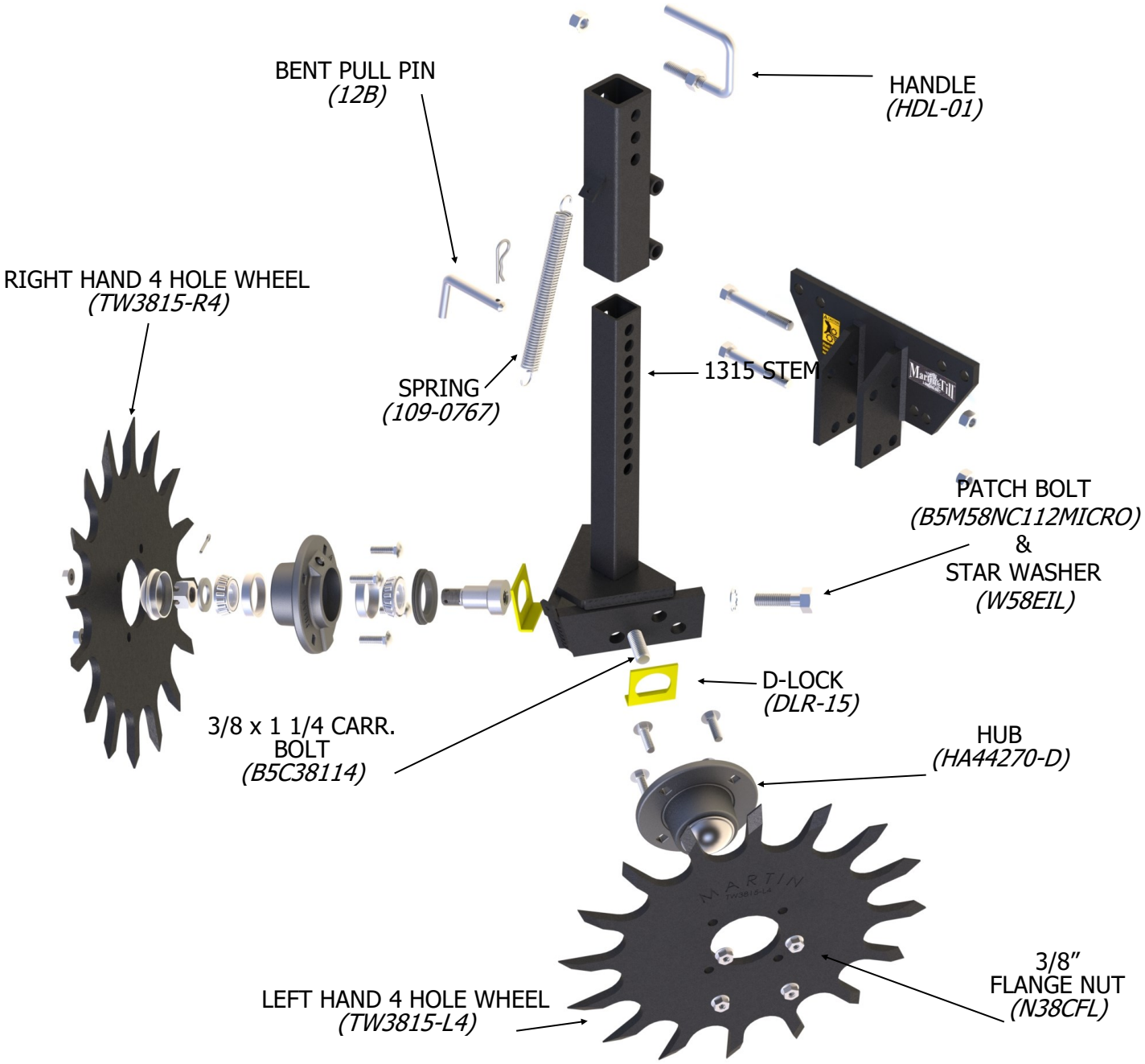

Pin Adjust Row Cleaners

WA1334

Mounted row cleaner with 2” stem and bolt-on axles.

Components: (1) 1334STEM, (2) HA44270, (1) TW3813-L4, (1) TW3813-R4 and (1) Lift assist handle.

Shown with MT892 mounting bracket for use on Case-IH 800 and 900.
1200 Series uses MT1250 mount
Notes: Early 800 style planters that have three mounting holes require IH800MTKIT. See page 36.

Planters equipped with other brands of 2” mounting brackets may use WA1334 without ordering Martin MT892; however, minimum adjustment increments will be 3/4” instead of 1/4”.

Exploded View-WA1334 Row Cleaner

WA1334

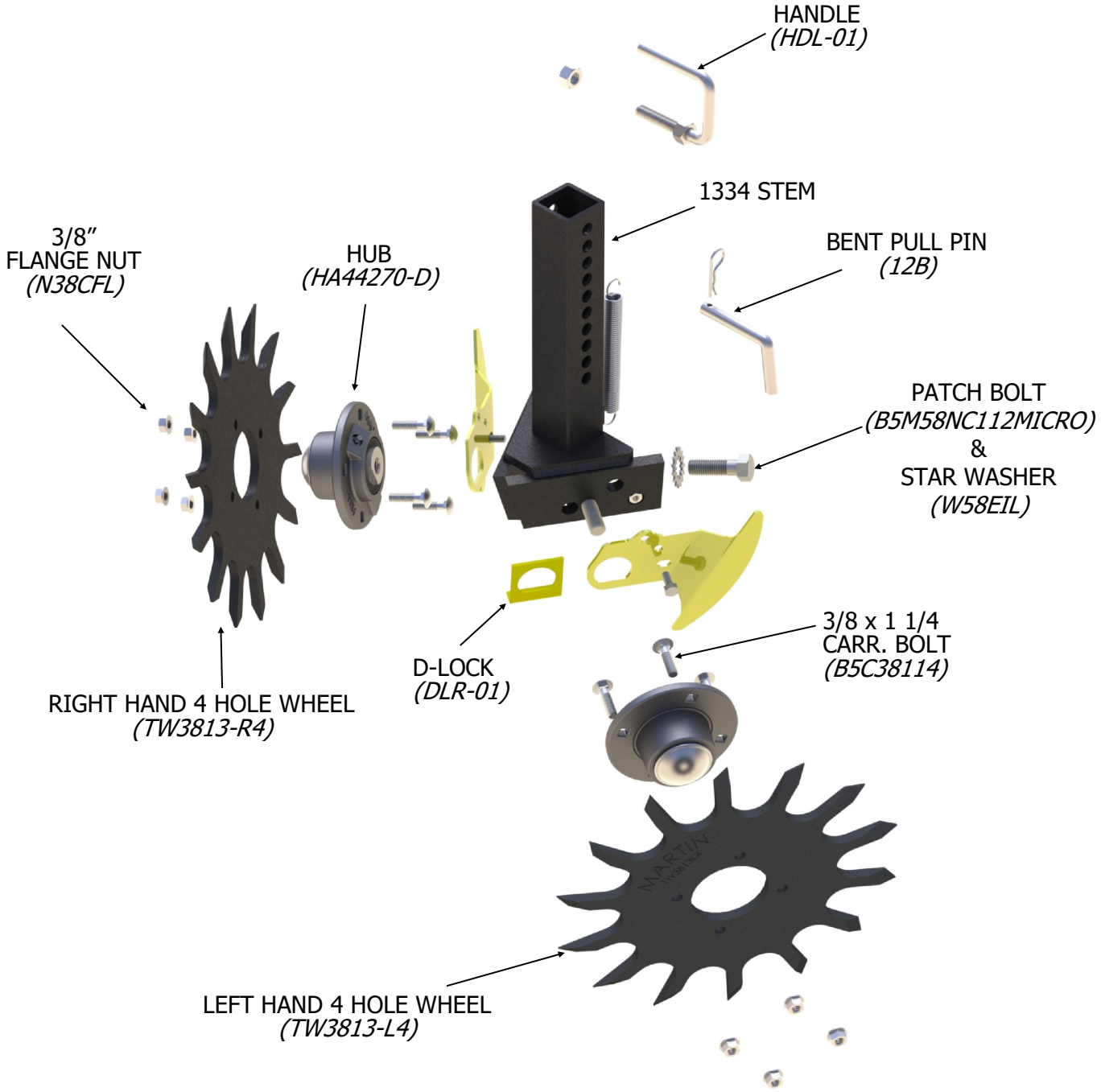

Pin Adjust Row Cleaners

WA1320N

1 1/2” stem narrow row cleaner, for planters with 15” spacing. Cleans only the row center. Order mounting bracket separately.

Components: (1) 1320STEM (with hubs), (1) TW3813L4, (1) TW3813R4, (1) ITD1320L, (1) ITD1320R, (1) Lift assist handle.

Note: Gauge wheel arm equalizers are recommended when using this unit to reduce row unit bounce caused by gauge wheels encountering varying amounts of residue.

Exploded View-WA1320N Row Cleaner

WA1320N

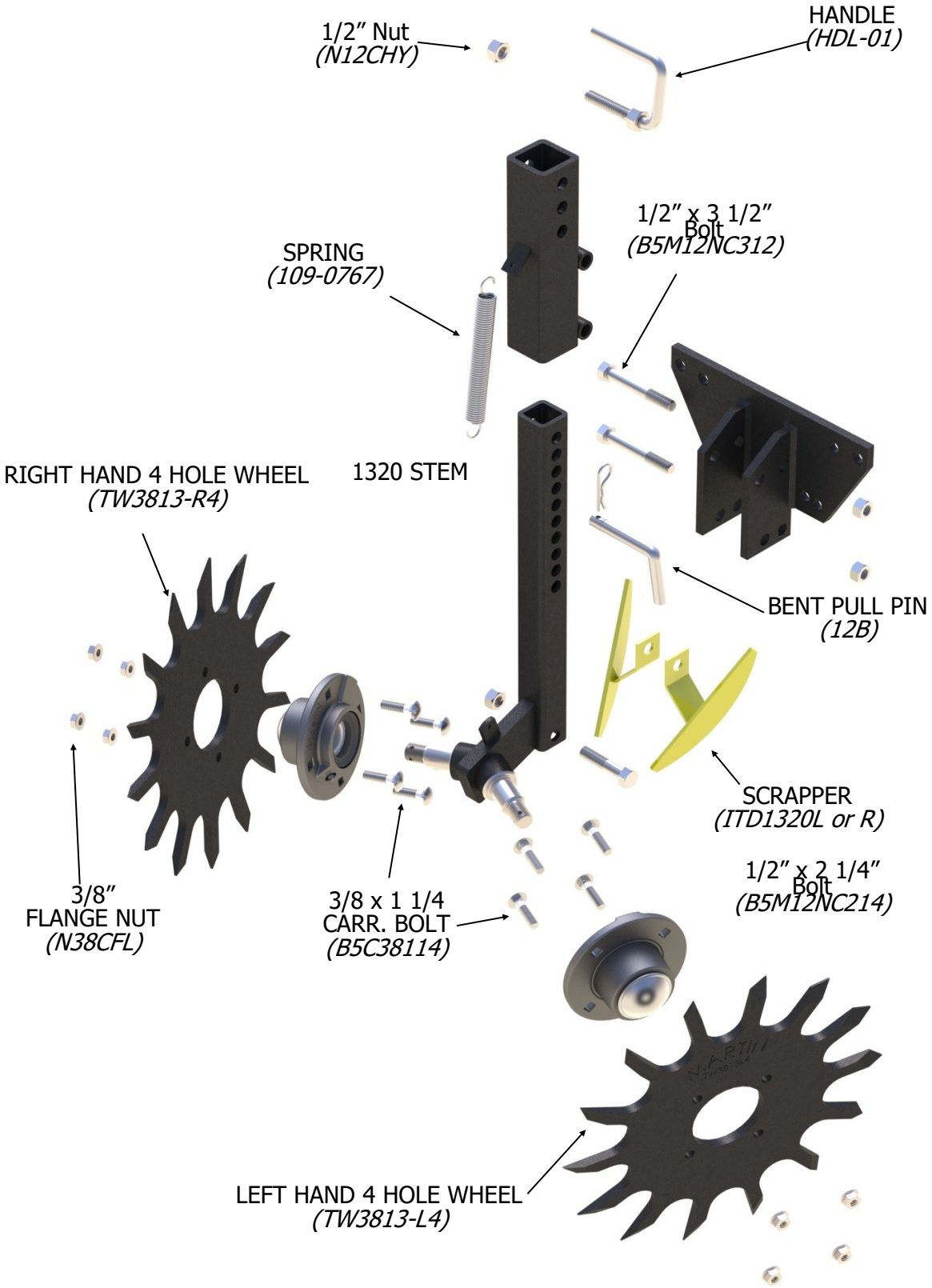

Mounts for Pin Adjust Row Cleaners

MT772

MT772 Spring assist mount. Accepts 1 1/2” stem wheel assemblies WA1532, WA1332, and WA1320N. For use on all Deere MaxEmerge and Kinze. Also for White 6000 series planters with out Heavy Duty down pressure springs. Receiver tube can be positioned in the rear hole to avoid interference with the bottom parallel arm sets that have the cross brace in the middle as shown, or placed in the forward holes to avoid interference with the bottom parallel arm sets that have the cross brace at the rear. Mounting hardware included.
Approximate weight: 10.0 lbs.

(Note: White 6000 series planters with heavy duty down pressure springs require MT610.)

Components: (1) TR82 - Receiver tube, (1) MPMX8 - Mount

Exploded View-MT772

MT772

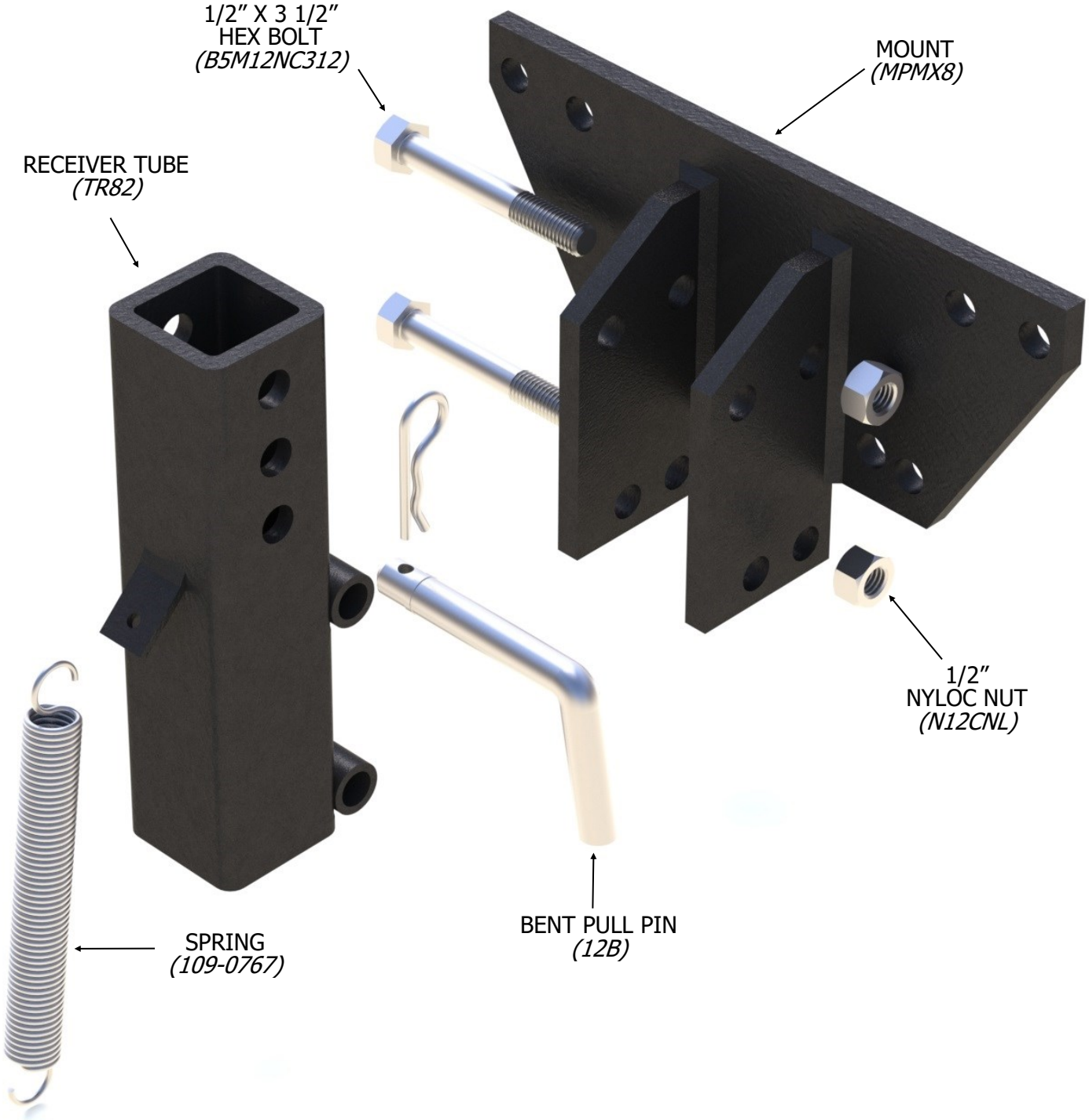

Attaching bracket for 1 1/2” stem pin adjust row cleaner

Mounts for Pin Adjust Row Cleaners

MT4772

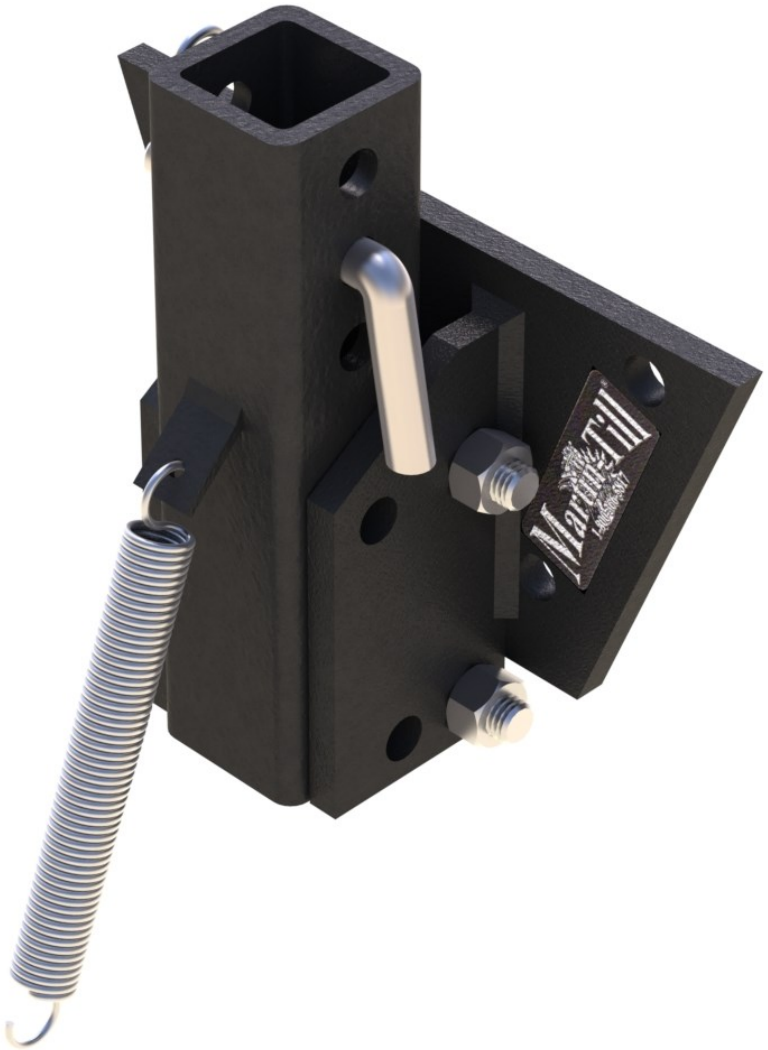

MT4772 Spring assist mount. Accepts 1 1/2” stem wheel assemblies WA1532, WA1332, and WA1320N. For use on Kinze 4900 series planters. Mounting hardware included.
Approximate weight: 10.0 lbs.

Components: (1) TR82 - Receiver tube, (1) MPMX4 - Mount

Mounts for Pin Adjust Row Cleaners

MT610

MT610 Spring assist mount. Accepts 1 1/2” stem wheel assemblies WA1532, WA1332, and WA1320N. For use on White 6000 series planters with heavy duty down pressure springs. Mounting hardware included. Approximate weight: 6 lbs.

Components: (1) TR82 - Receiver tube, (2) MPWT61- Mount

Exploded View-MT4772

MT4772

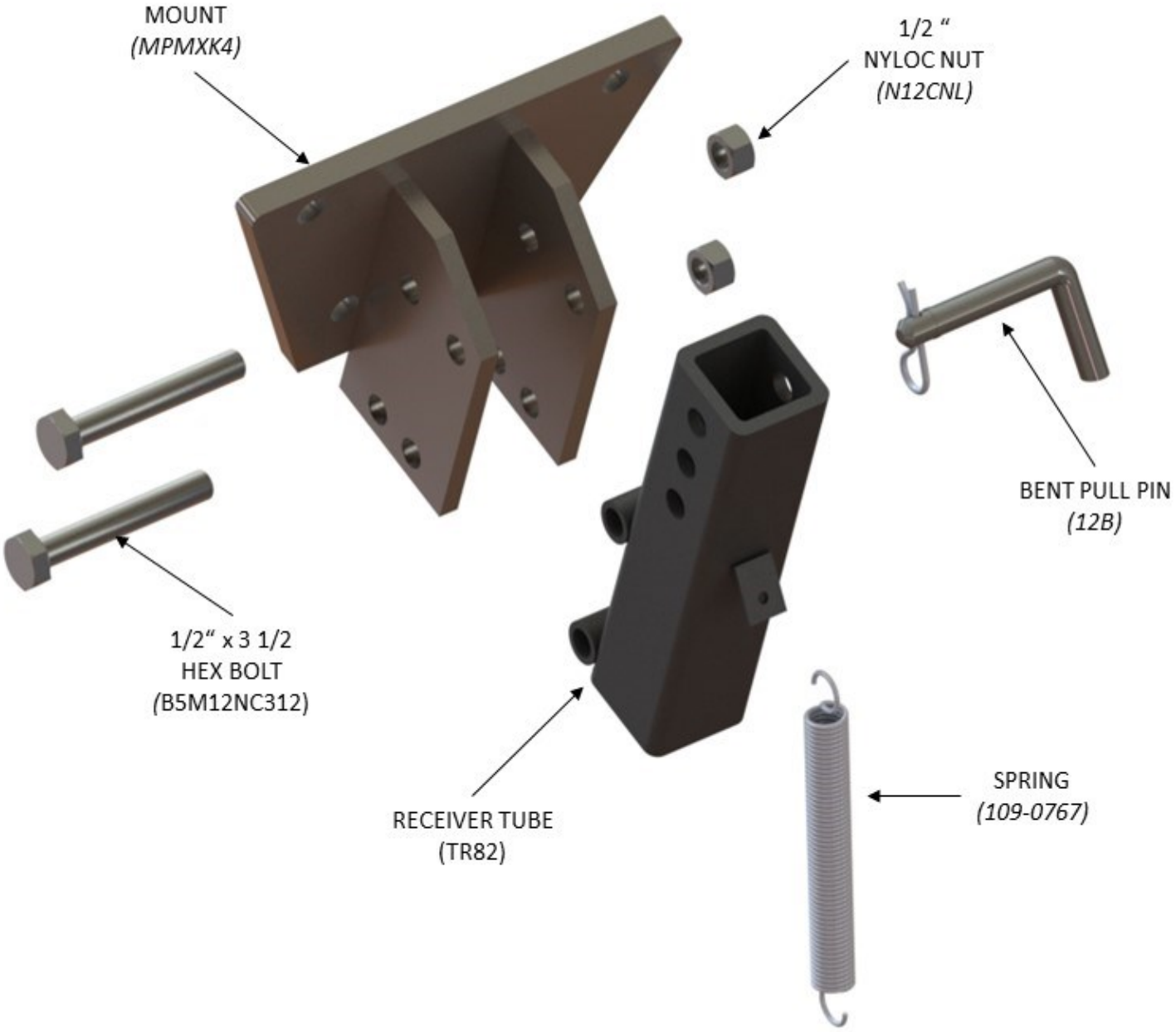

Attaching bracket for 1 1/2" stem pin adjust row cleaner

Exploded View-MT610

MT610

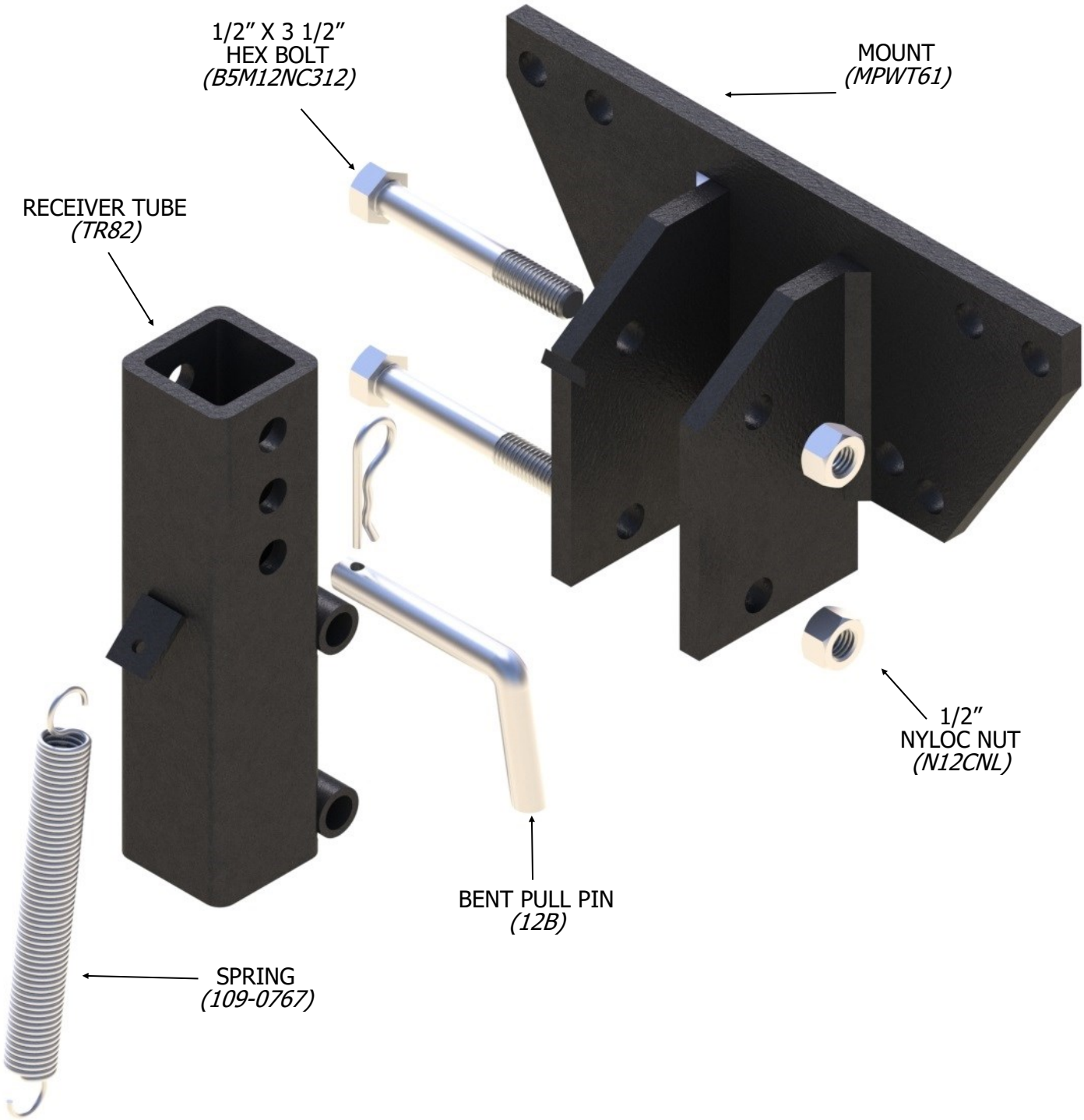

Attaching bracket for 1 1/2” stem pin adjust row cleaner

Mounts for Pin Adjust Row Cleaners

MT810

MT810 Spring assist mount. Accepts 1 1/2” stem wheel assemblies WA1532, WA1332, and WA1320N. For use on White 8000 series planters. Mounting hardware included. Approximate weight: 6.4 lbs.

Components: (1) TR82 - Receiver tube, (2) MPWT81– Mount

Exploded View-MT810

MT810

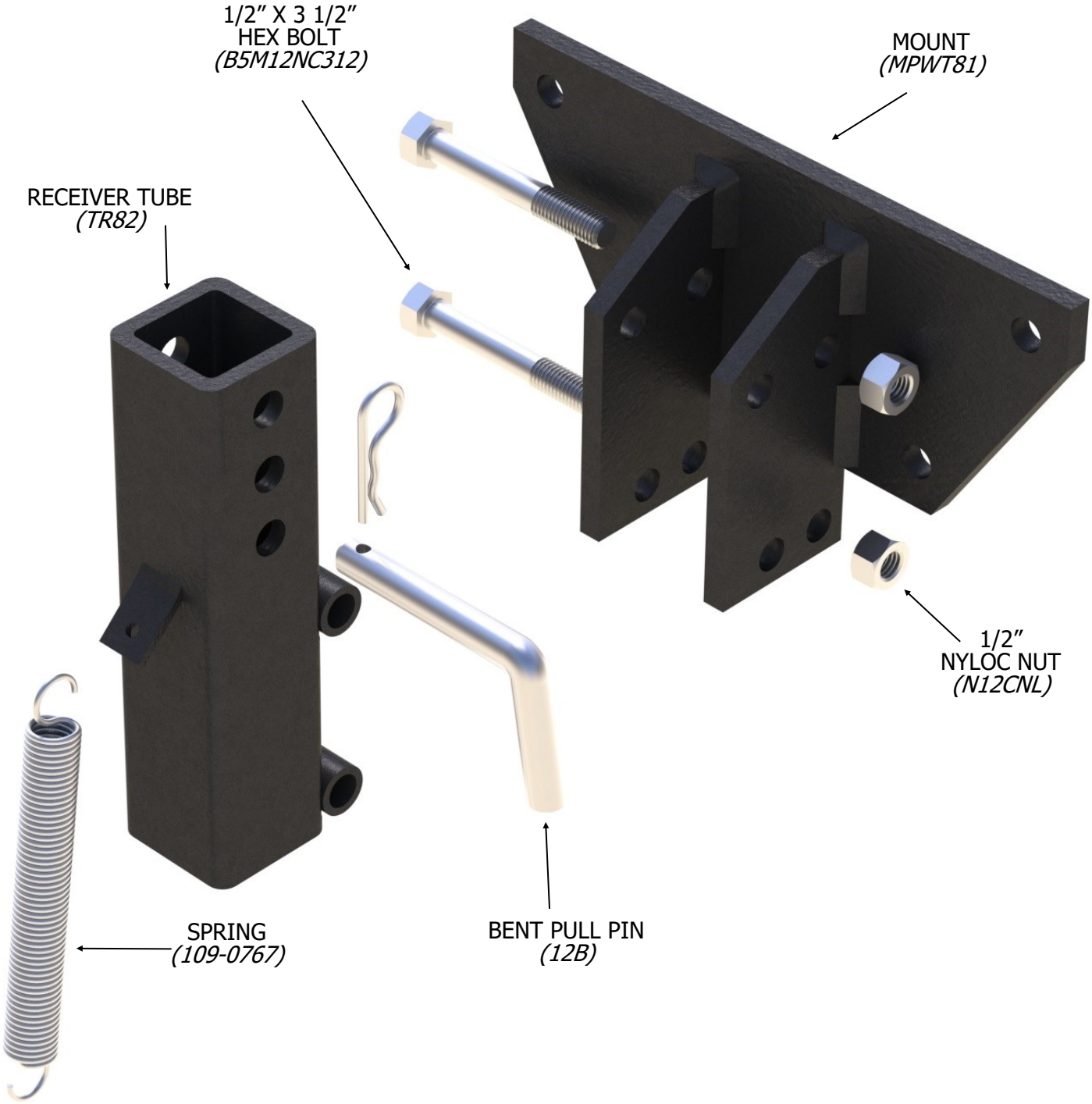

Attaching bracket for 1 1/2” stem pin adjust row cleaner

Mounts for Pin Adjust Row Cleaners

MT892

MT892 Spring assist mount. Accepts 2” stem wheel assemblies WA1334. For use with Case IH 800, 900 and 950. Mounting hardware included. Approximate weight: 7.2 lbs.

Components: This is a one piece mount.

* 12B bent pull pin and 109-0767 spring included.

Mounts for Pin Adjust Row Cleaners

MT1250

MT1250 Spring assist mount. Accepts 2” stem wheel assemblies WA1334. For use with Case IH 1200 & 1300 series planters . Mounting hardware included.
Approximate weight: 7.2 lbs.

Components: This is a one piece mount.

* 12B bent pull pin and 109-0767 spring included.

Mounts for Pin Adjust Row Cleaners

MT385

MT385 Spring assist mount. Accepts 1 1/2” stem wheel assemblies WA1532, WA1332, and WA1320N. For use on Deutz AC Quadra Disk and Landoll planters. Mounting hardware included. Approximate weight: 7.6 lbs.

Components: This is a one piece mount.

*12B bent pull pin and 109-0767 spring included.

Mounts for Pin Adjust Row Cleaners

MT512

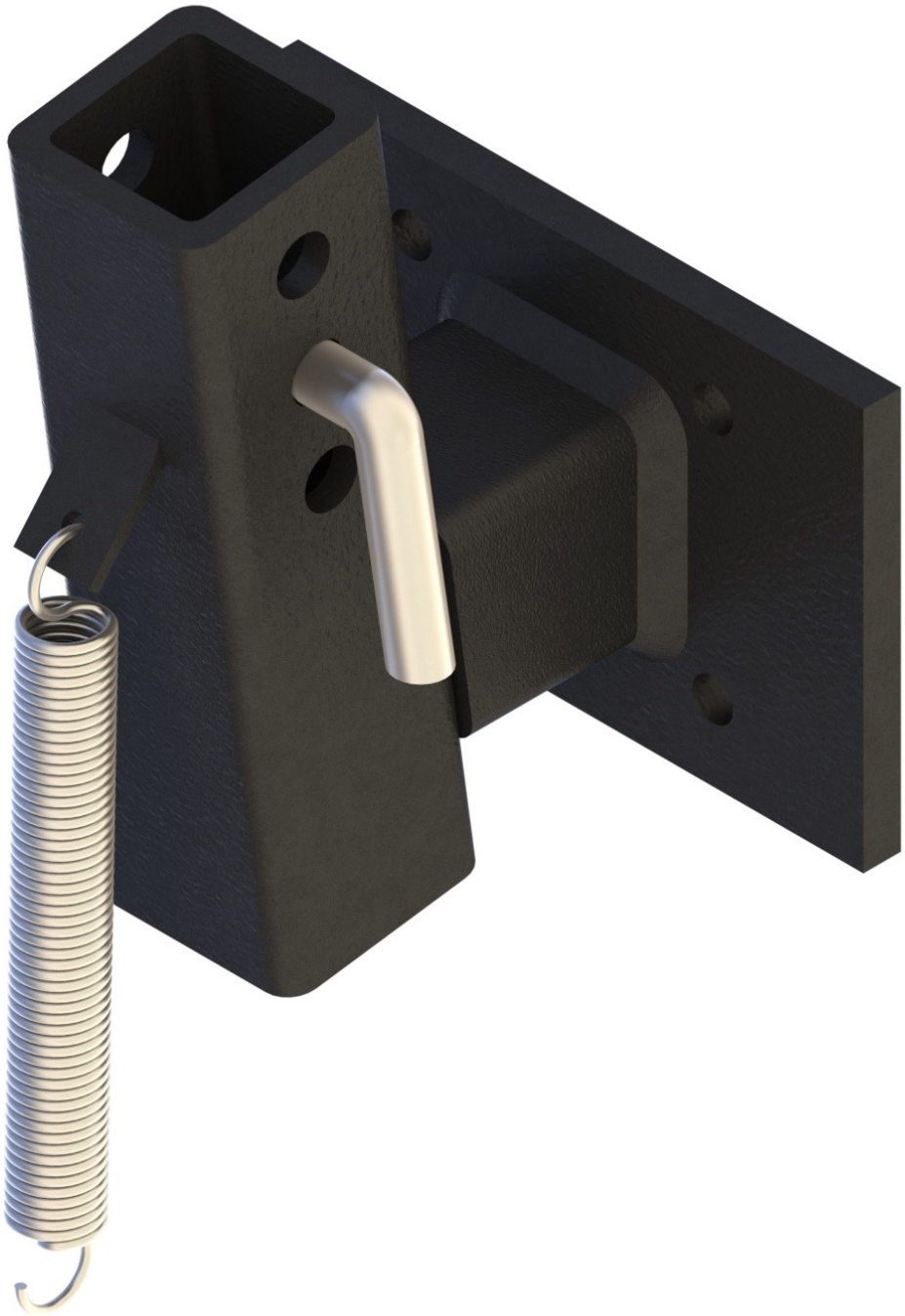

MT512 Spring assist mount. Accepts 1 1/2” stem wheel assemblies WA1532, WA1332, and WA1320N. For use on White 5100 series planters only. Mounting hardware included. Approximate weight: 6.3 lbs.

Components: This is a one piece mount.

*12B bent pull pin and 109-0767 spring included.

WFM413 Assembly

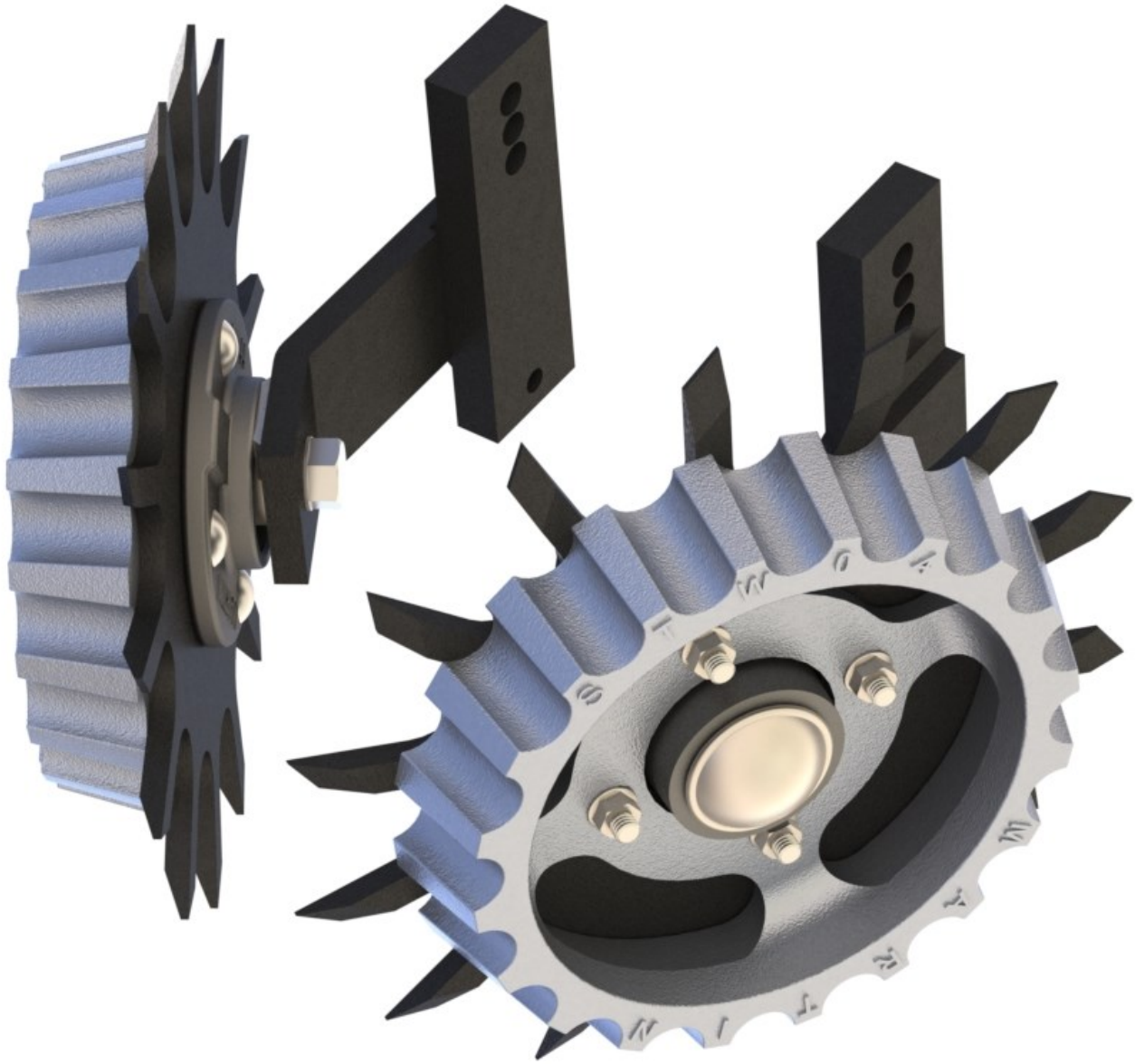

For use on White double arm frame mounted coulters.

Components: (1) WFM413TL, (1) WFM413TR, (2) HA44270-D, (1) TW3813-L4, (1) TW3813-R4, (2) STW-04.

Exploded View-WFM413

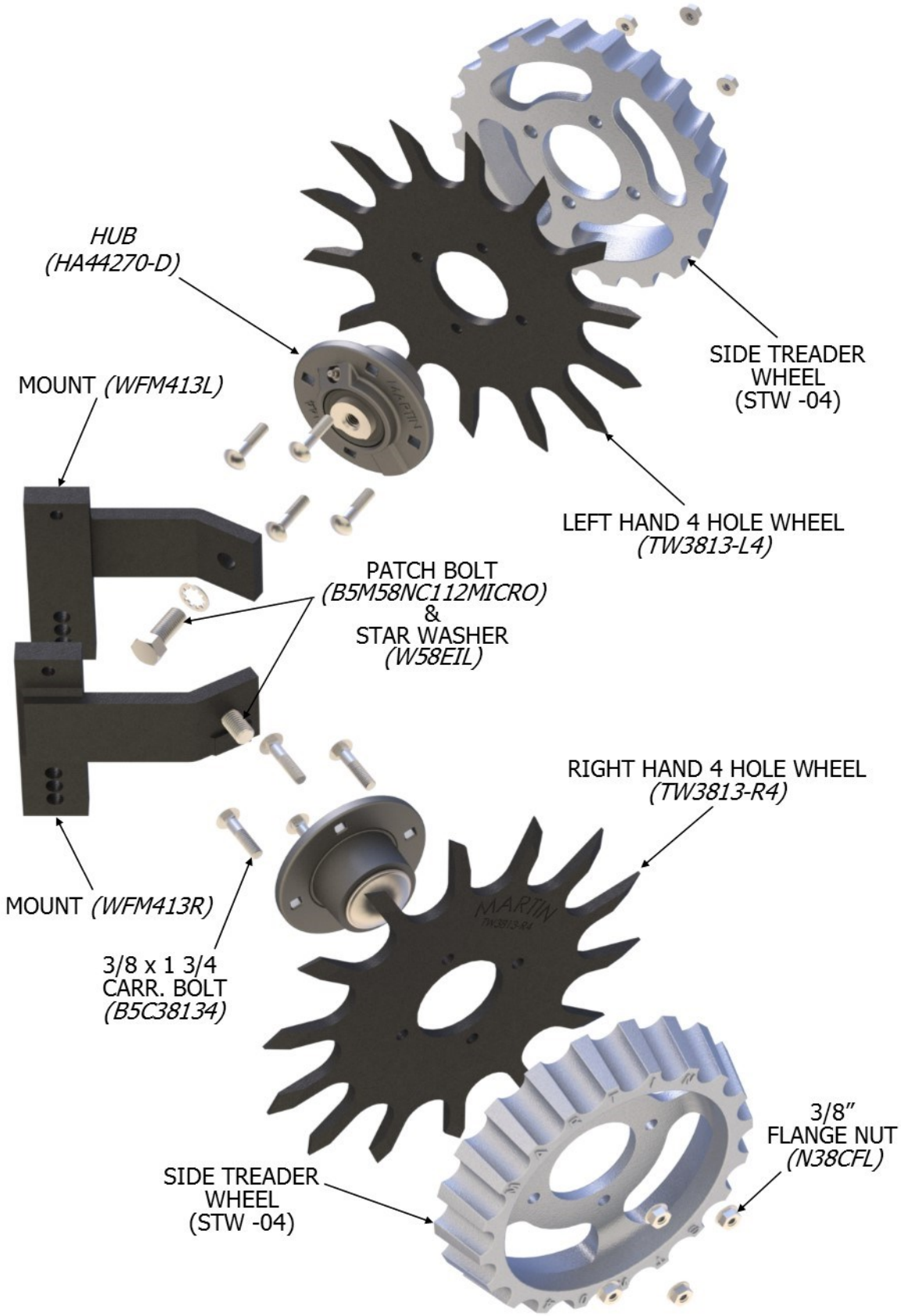

Mounts for Pin Adjust Row Cleaners

IH800MTKIT

IH800MTKIT needed for early 800 style planters that have three mounting holes.

Model C125 Floating Row Cleaner

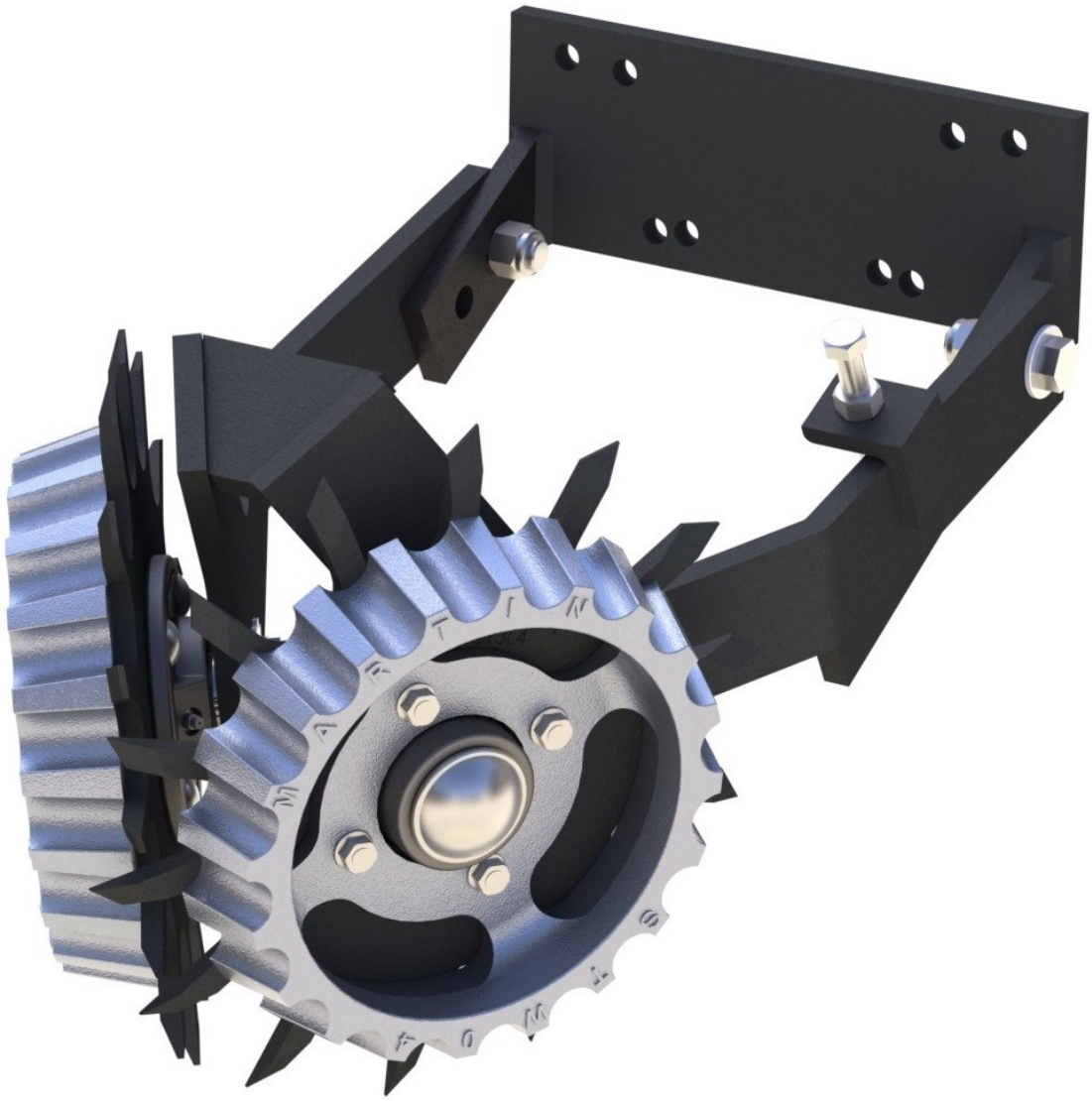

Shown with optional
Side Treader Wheels (STW-04)

C125 Series floating wrap around row cleaners follow ground contours. Stop bolt can be adjusted to limit depth. Mounting brackets are available to fit JD7000 thru 1700 series planters, all Kinze (except 4900), all White 6000 and 8000 series, and IH 800, 900 & 1200 series planters.

Exploded View-Model C125 Floating Row Cleaner

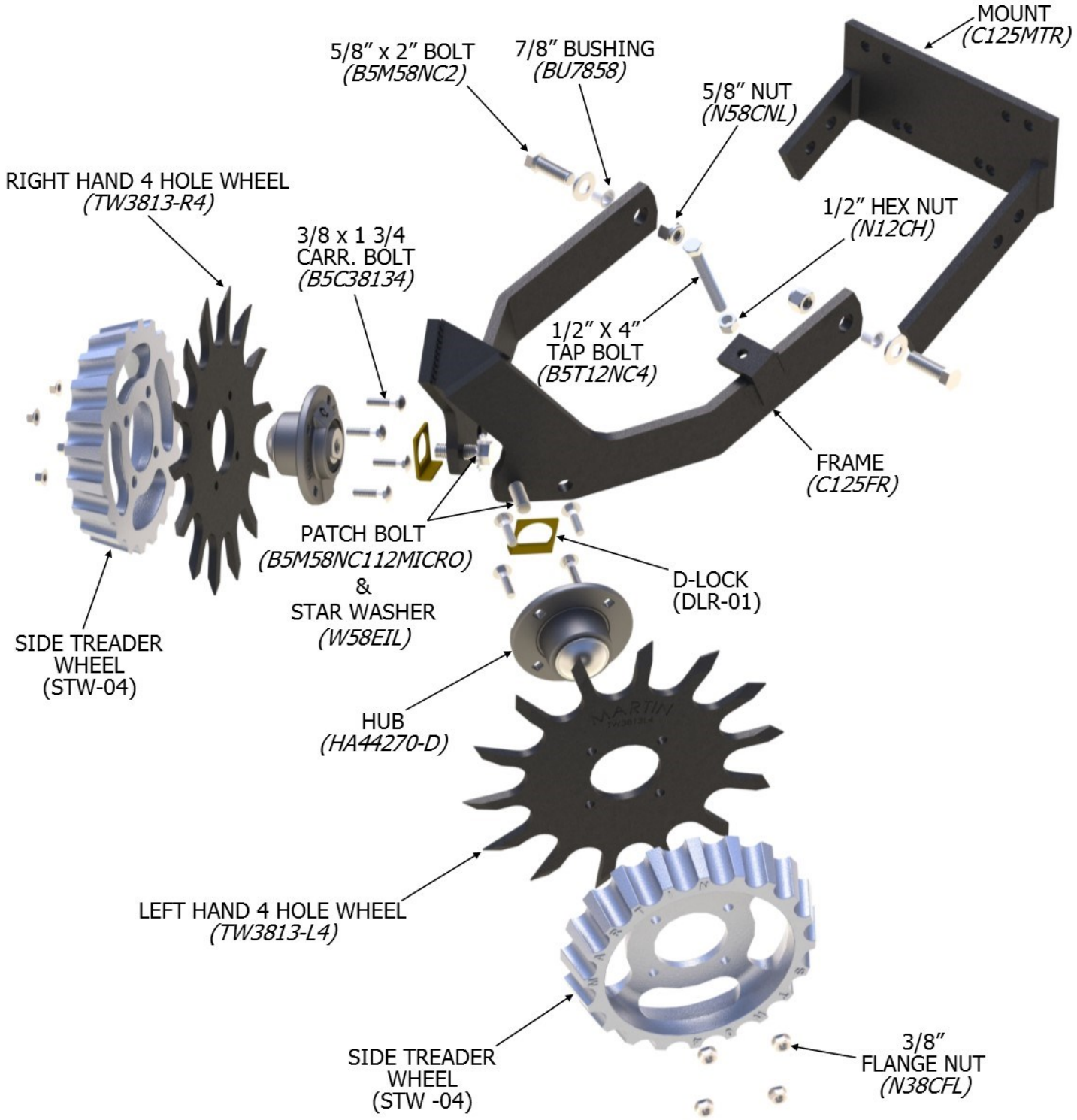

C125 Mounts

C125MTS

Short mounting bracket for C125 floating row cleaner. Fits Deere 7000, 7100, Kinze (except 4900), and White 6000 series planters. Not for use with coulter. Positions row cleaner wheel front edge 19 5/16” ahead of planter unit face. Mounting hardware included. Approximate weight: 9.1 lbs

C125MTS-81

Short mounting bracket for C125 floating row cleaner. Fits White 8000 series planter. Some 8000 series planters may experience interference with the drive shaft. Not for use with no -till coulters. Positions wheel front edge 19 5/16” ahead of planter unit face. Mounting hardware included. Approximate weight: 9.0 lbs.
weight: 10.9 lbs.

C125 Mounts

C125MTS-IH

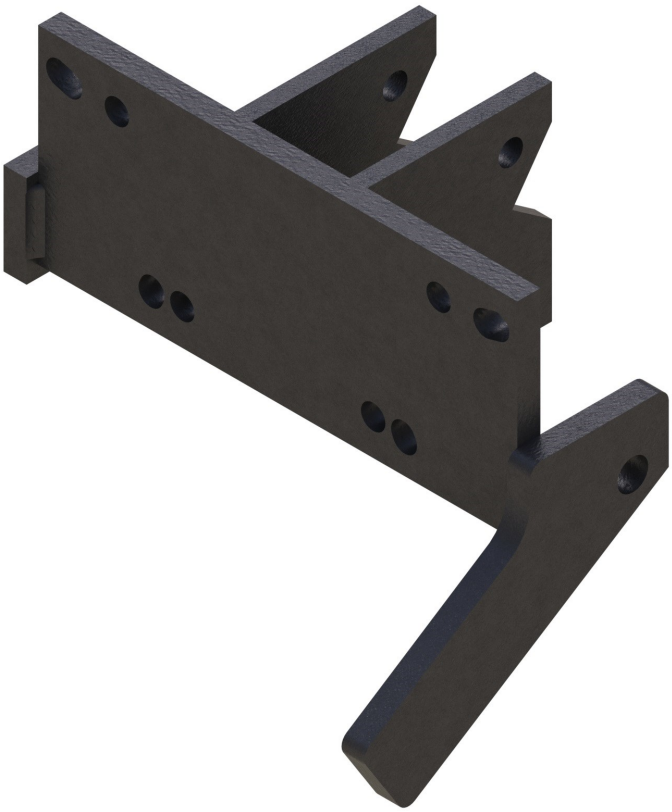

Short mounting bracket for C125 floating row cleaner. Fits Case IH 800, 900, & 1200 series. Not for use with no-till coulters. Positions row cleaner wheel front edge 22 9/16” ahead of planter unit front. Mounting hardware included. Approximate weight: 12.6 lbs.

C125MTS-XP

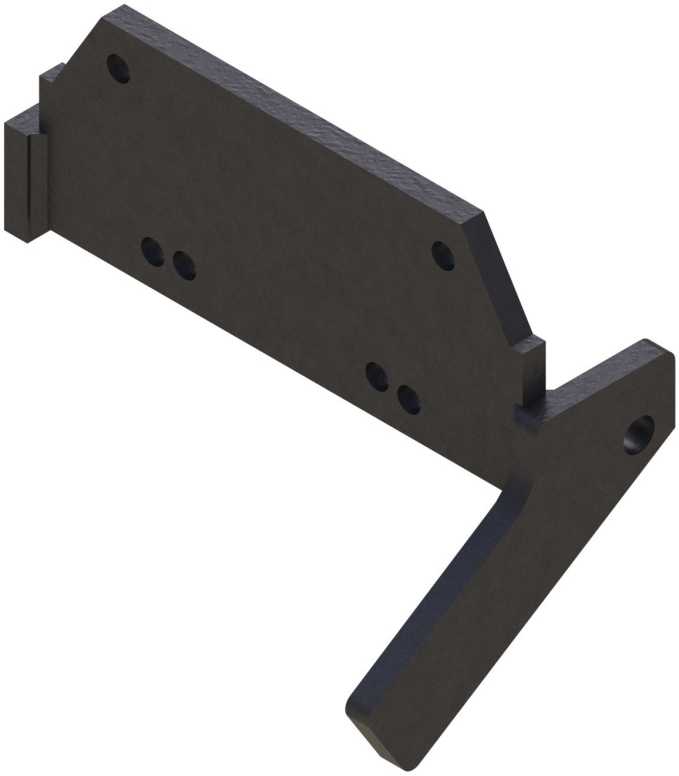

Short mounting bracket for C125 floating row cleaner. Fits Deere 7200-1700 series planters. Not for use with coulter. Positions row cleaner wheel front edge 19 5/16” ahead of planter unit face. Mounting hardware included. Approximate weight: 8.8 lbs.

C125 Mounts

C125MTR

Regular mounting bracket for C125 floating row cleaner. Fits Deere 7000, 7100, Kinze (except 4900)and White 6000 series planters. May be used with most no-till coulters. Positions row cleaner wheel front edge 24 3/4” ahead of planter unit face plate. Mounting hardware included. Approximate weight: 10.9 lbs.

C125MTR-81

Regular mounting bracket for C125 floating row cleaner. Fits White 8000 series planters. Some 8000 series planters may experience interference with the drive shaft. May be used with most no-till coulters. Positions row cleaner wheel front edge 24 3/4” ahead of planter unit face. Mounting hardware included. Approximate weight: 10.9 lbs.

C125 Mounts

C125MTR-IH

Regular mounting bracket for C125 floating wrap around row cleaner. Fits Case IH 800, 900, & 1200 series. Positions row cleaner wheel front edge 25 3/4" ahead of planter unit front. Most no-till coulters are compatible with this mount. Mounting hardware included. Approximate weight: 14.0 lbs.

C125MTR-XP

Regular mounting bracket for C125 floating wrap around row cleaner. May be used with most no-till coulters. Fits Deere 7200 -1700 series planters. Positions row cleaner wheel front edge 24 3/4" ahead of planter unit face plate. Mounting hardware included. Approximate weight: 10.1 lbs.

C125 Mounts

C125MTL-XP

Long mounting bracket for C125 floating wrap around row cleaner. Can be used with John Deere 7200-1700 series planters with Deere unit mounted double disk fertilizer openers. Positions row cleaner wheel front edge 27 1/4” ahead of planter unit face. Mounting hardware included. Approximate weight: 11.7 lbs

C125MTXL-XP

Extra long mounting bracket for C125 floating wrap around row cleaner. Can be used with Deere 7200-1700 series planters with Deere unit mounted fertilizer openers and single disk fertilizer injection systems. Positions row cleaner wheel front edge 29 3/4” ahead of planter unit face. Mounting hardware included. Approximate weight: 13.5 lbs.

C125 Options

CA-02

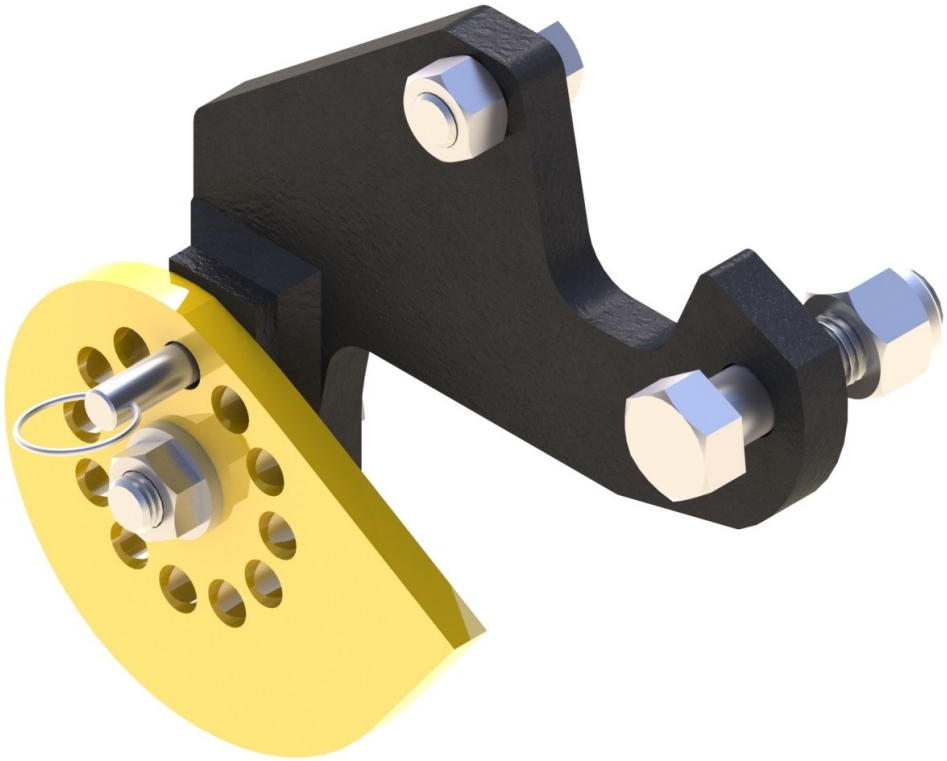

Optional cam adjustment for C125 row cleaners. Allows rapid adjustment of C125 units with twelve 1/4” inch increments. Hardware included.

DP-01

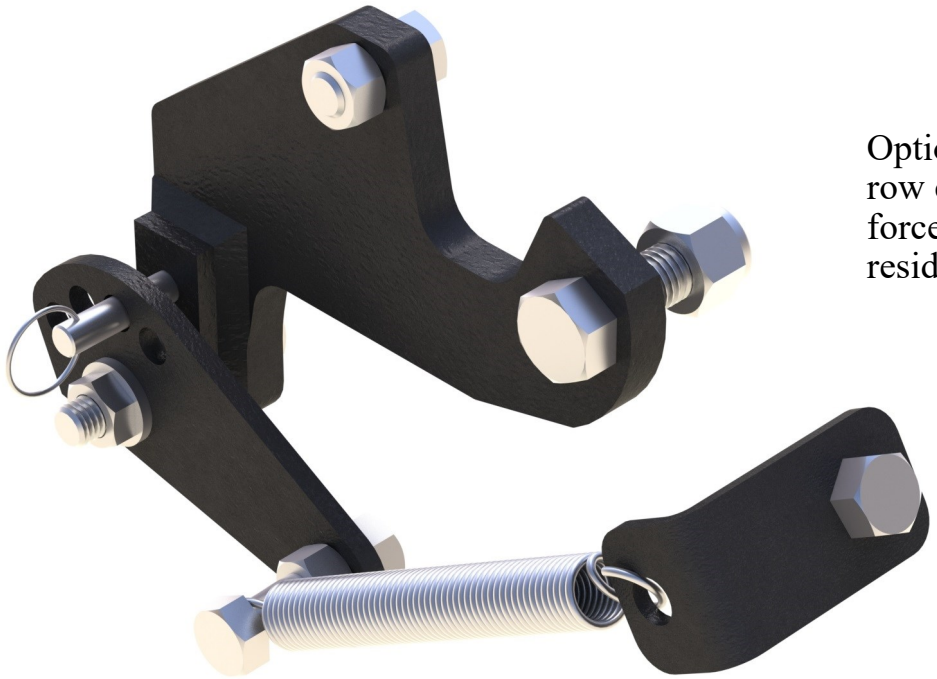

Optional down pressure kit for C125 row cleaners. Provides extra down force for clearing heavier residue. Hardware included.

C125 Options

CDP-01

Optional cam and down pressure kit for C125 row cleaners. Combines CA-02 and DP-01 kits. Hardware included.

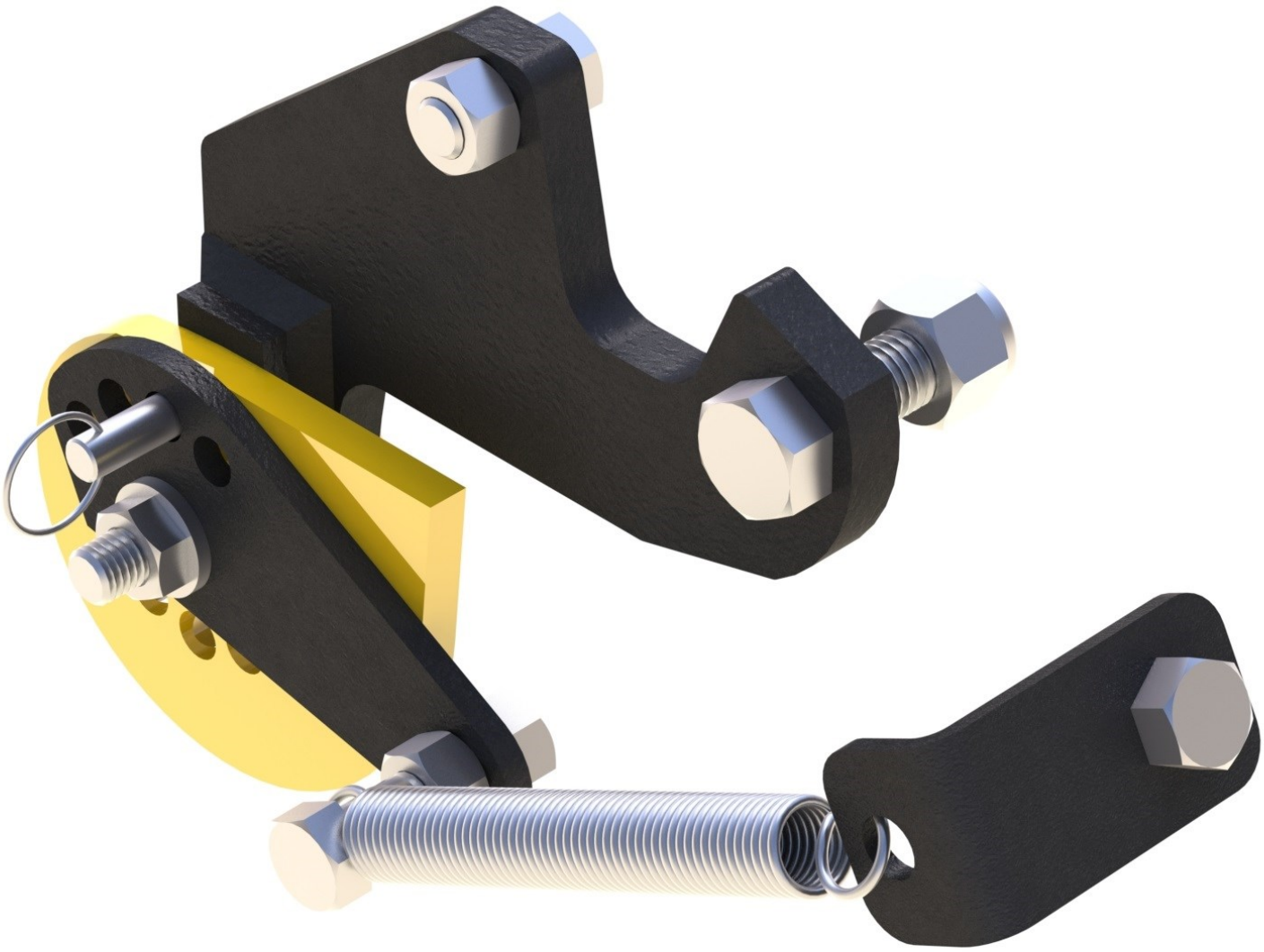

C125 Great Plains Twin Row Floating Row Cleaner

C125-GPTR

Floating Row Cleaner for Great Plains Twin Row-Right Unit.

C125-GPTR SHOWN
C125-GPTL OPPOSITE

Exploded View-C125 Great Plains Twin Row

C125-GPTR

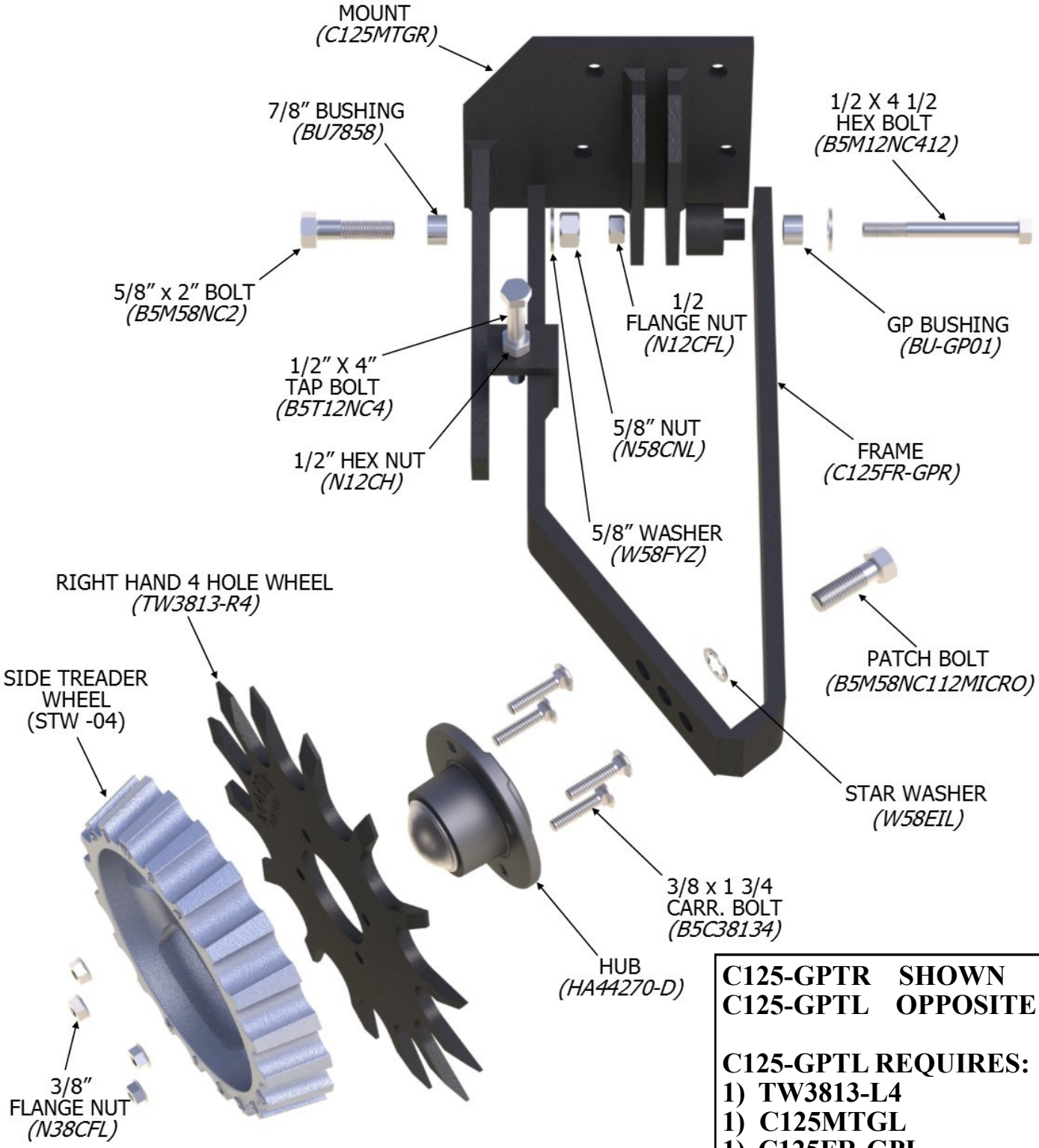

C125-GPTR SHOWN
C125-GPTL OPPOSITE

C125-GPTL REQUIRES:
1) TW3813-L4
1) C125MTGL
1) C125FR-GPL

Hubs

HA44270-D

Four-bolt row cleaner hub and axle combination, D Series.
Approx. weight: 4.3lbs.

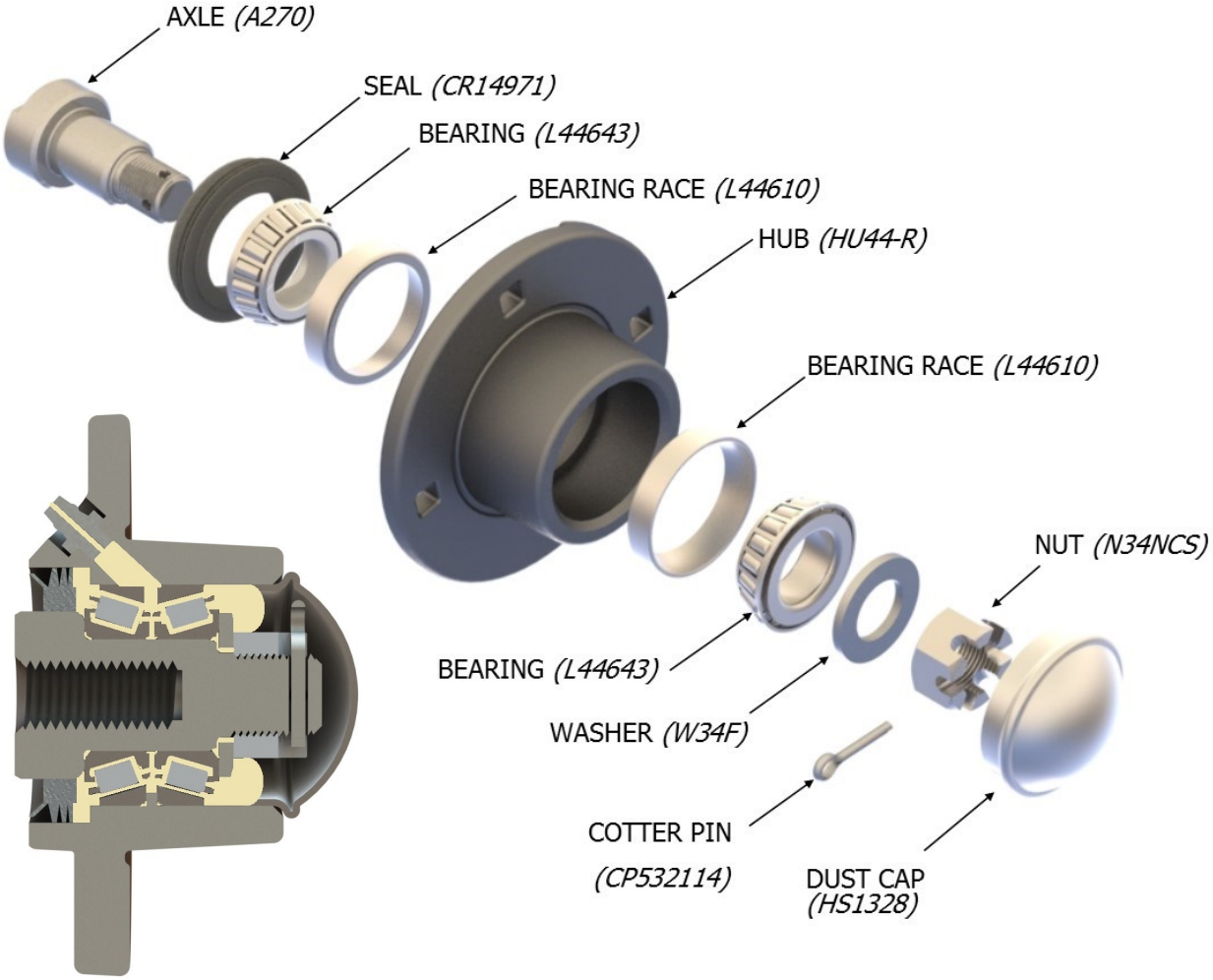

Hubs

HRKIT

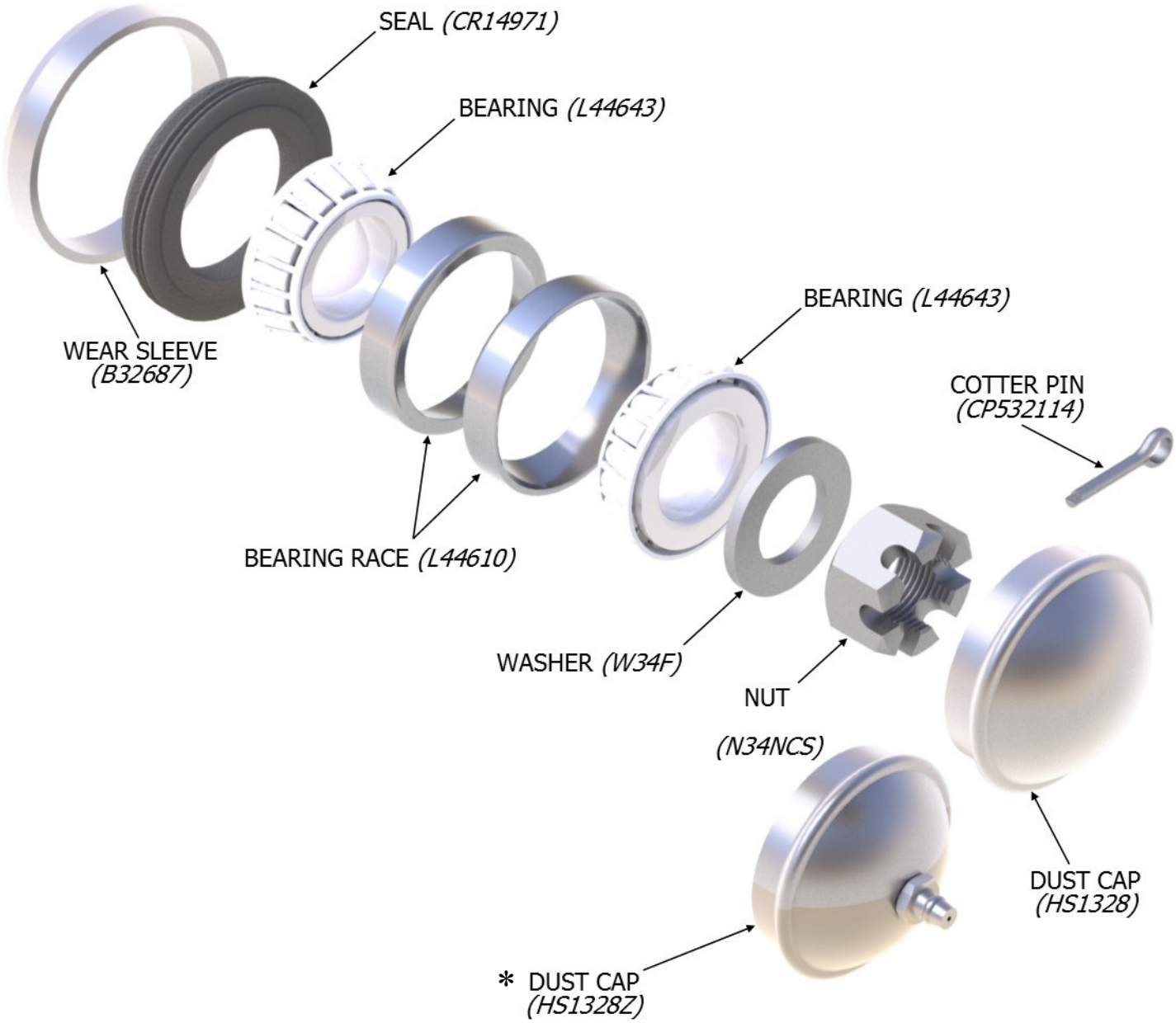

* Optional dust cap for hubs produced prior to February 2000.

Hubs

CHU44C (900101)

Four-bolt cast hub with heavy duty 5205 double row ball bearing.

Maintenance free Six Lip Seal Design

Used on WA1345 Wheel Assemblies

Approx. weight: 4.3lbs.

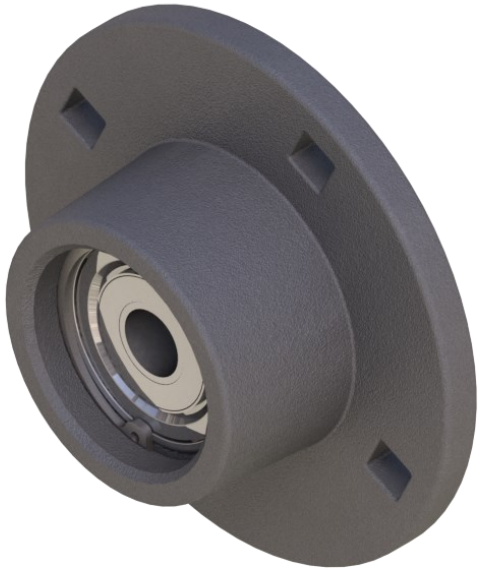

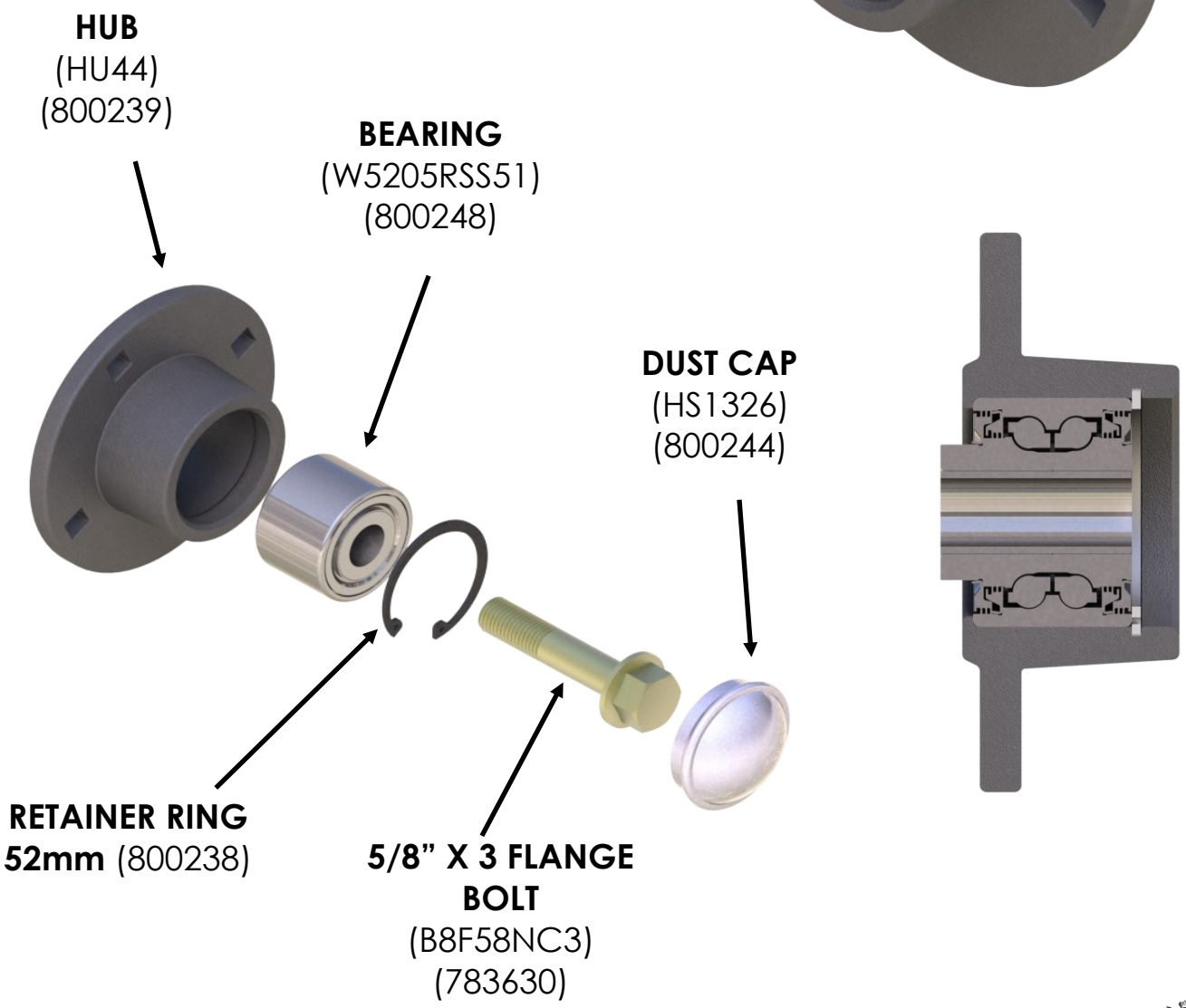

Hubs

HA13270-D

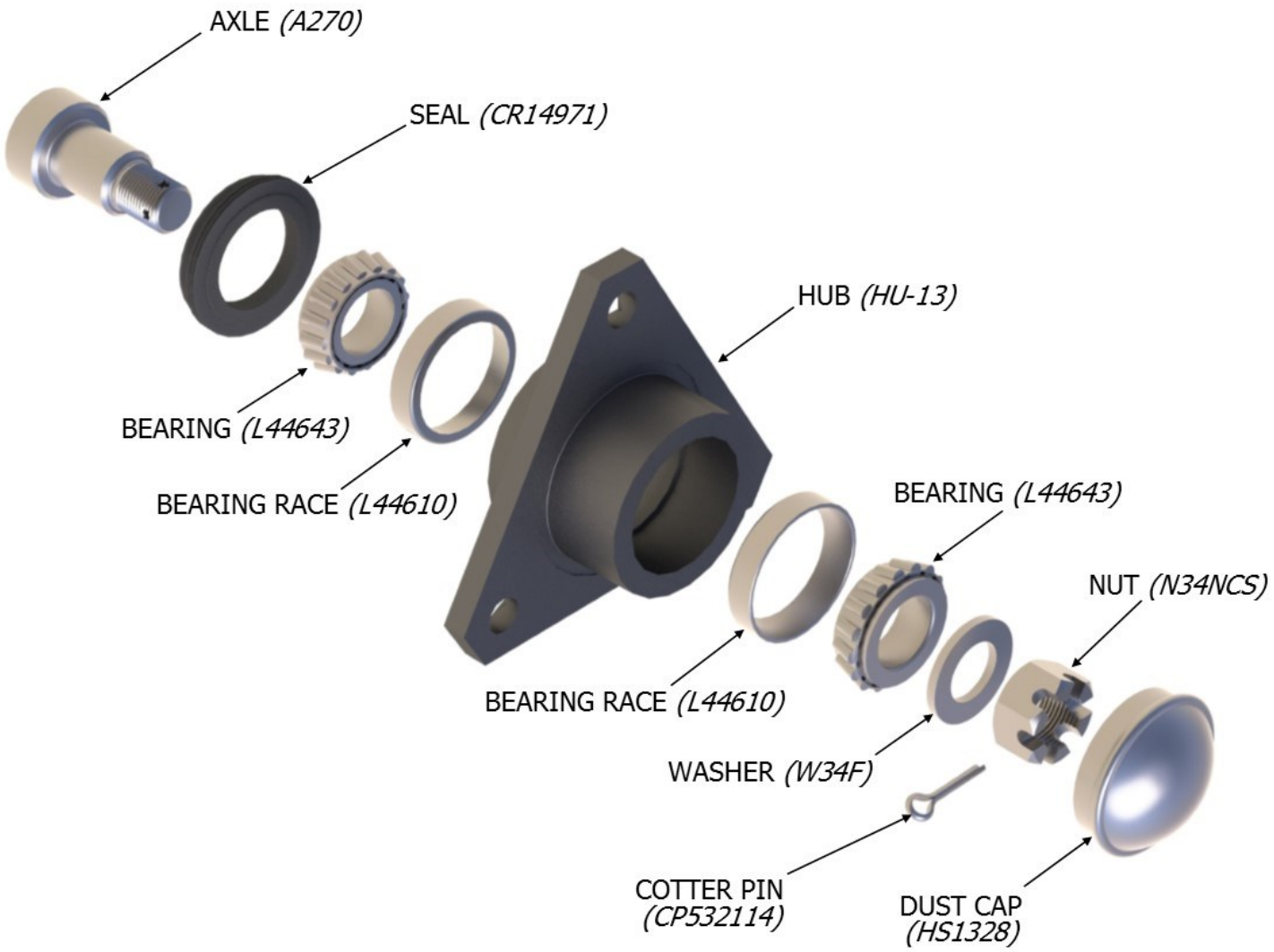

3-Bolt hub for 13” wheels. Fits all floating row cleaners with three-bolt pattern. Approximate weight: 4 lbs.

Hubs

HA13305-D

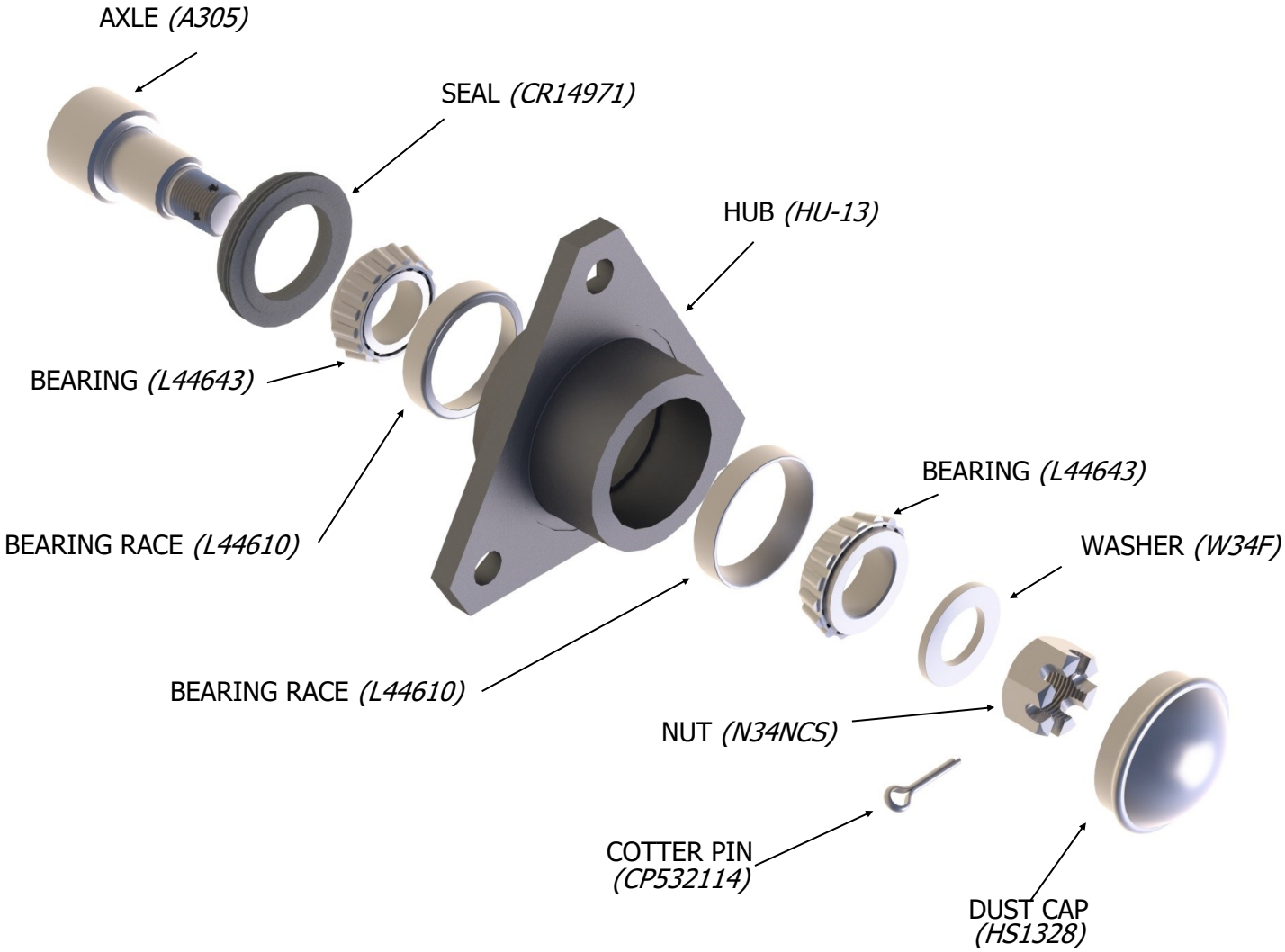

3-Bolt hub for 13” wheels. Fits WA1317 and WA1330 stem mounted row cleaners with three-bolt pattern.
Approximate weight: 4.3 lbs.

Hubs

CHU022

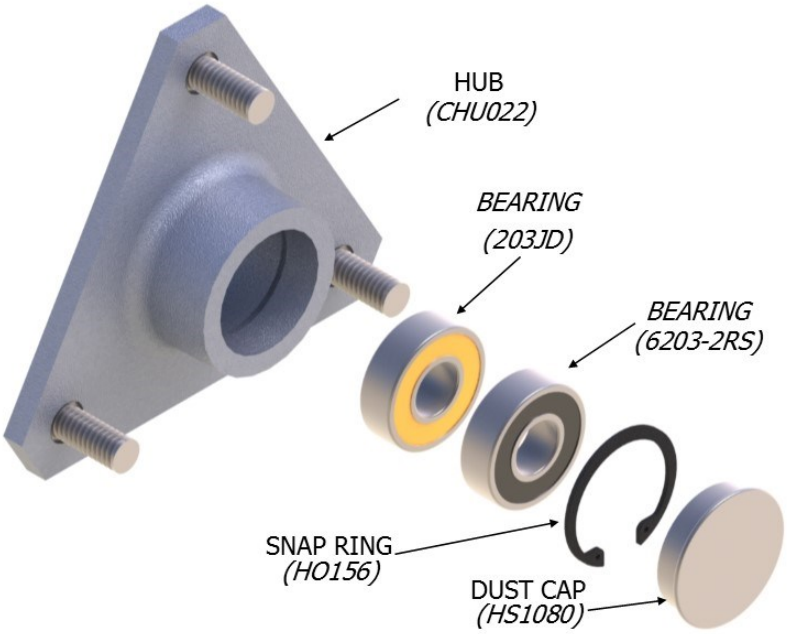

Three bolt closing wheel hub for use on frames with 17mm stud. Contains one 6203-2RS and one 203JD bearing. Approximate weight: 1.2 lbs.

CHU024

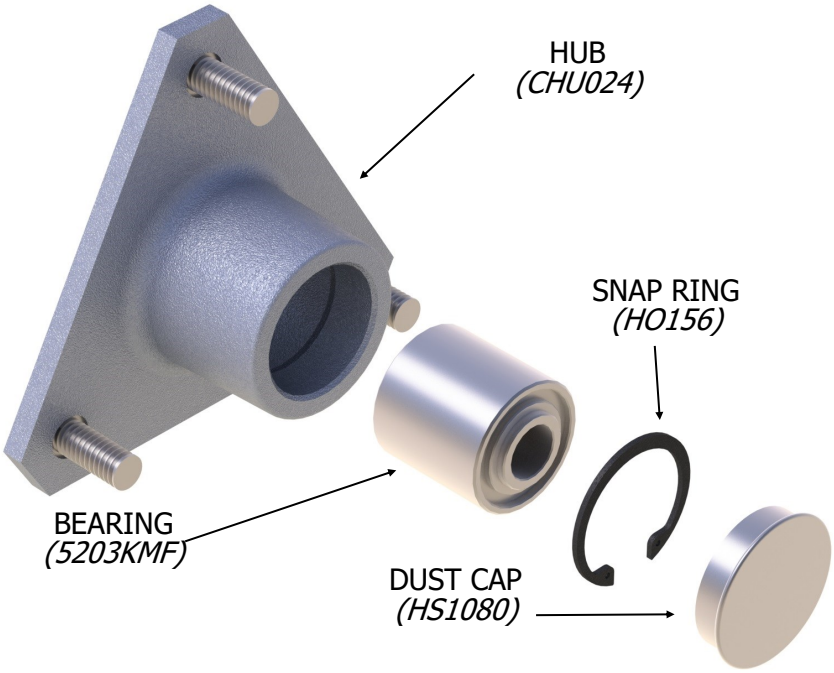

Three bolt closing wheel hub. Uses one 5203KMF double row ball bearing. Approximate weight: 1.5 lbs.

Weight Transfer Systems

1770/75 12-16 Row

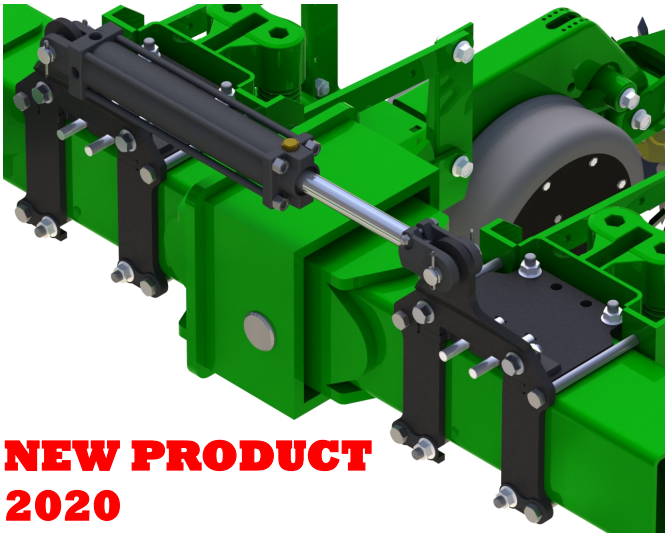

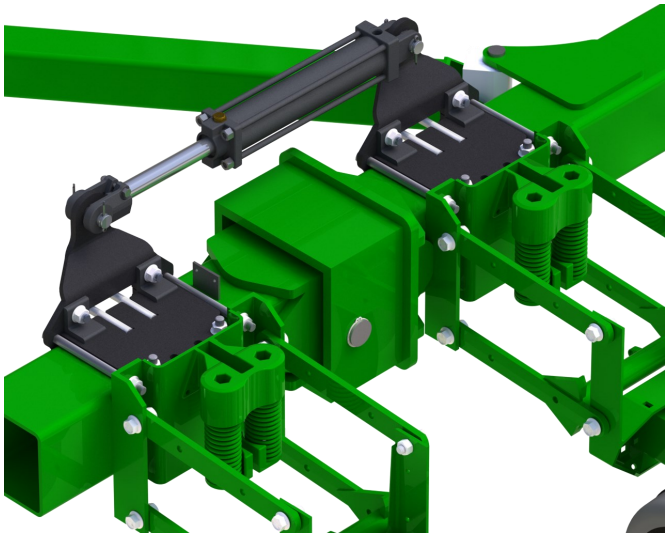

Hydraulic Frame Weight Distribution System

Can be used with Frame Mounted Opener

Fits 1770 12 and 16 Row

- In-Cab Control Box with harness (Electronic PWM version)
- Bolt on brackets
- Hydraulic Pressure Gauge
- Grade 8 mounting hardware
- Industry standard durable hydraulic valve
- NOTE: Kit does not include custom hydraulic hoses or fittings

Check fit up for Center Frame Mounted Fertilizer Tanks and Brackets for possible tank

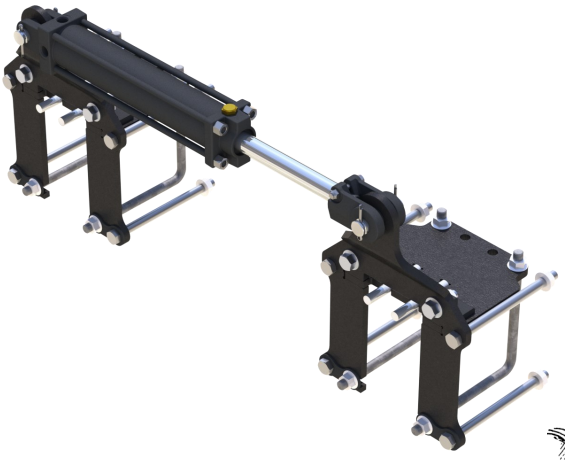

Weight Transfer Systems

1770 24 Row

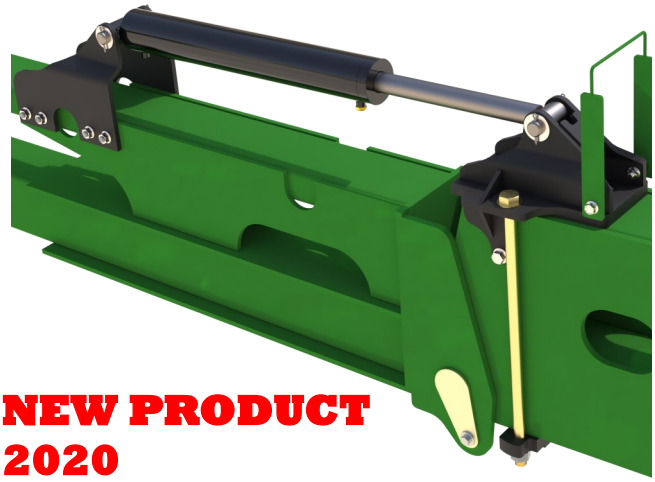

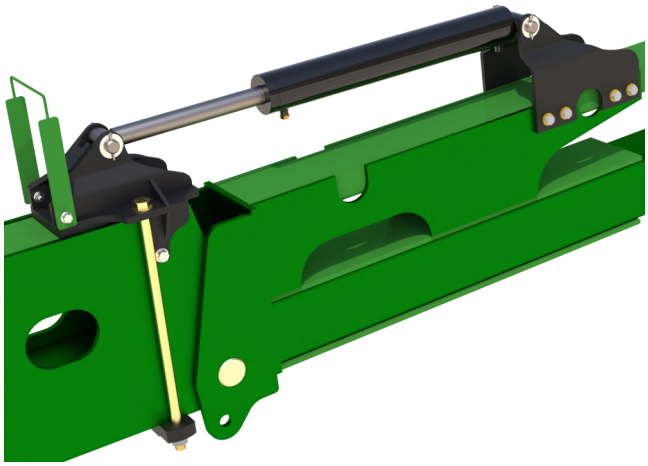

Hydraulic Frame Weight Distribution System

Can be used with Frame Mounted Opener

Fits 1770 24 Row

- In-Cab Control Box with harness (Electronic PWM version)
- Bolt on brackets
- Hydraulic Pressure Gauge
- Grade 8 mounting hardware
- Industry standard durable hydraulic valve
- NOTE: Kit does not include custom hydraulic hoses or fittings

Check fit up for Center Frame Mounted Fertilizer Tanks and Brackets for possible tank

Weight Transfer Systems

1790/95 12-16 Row

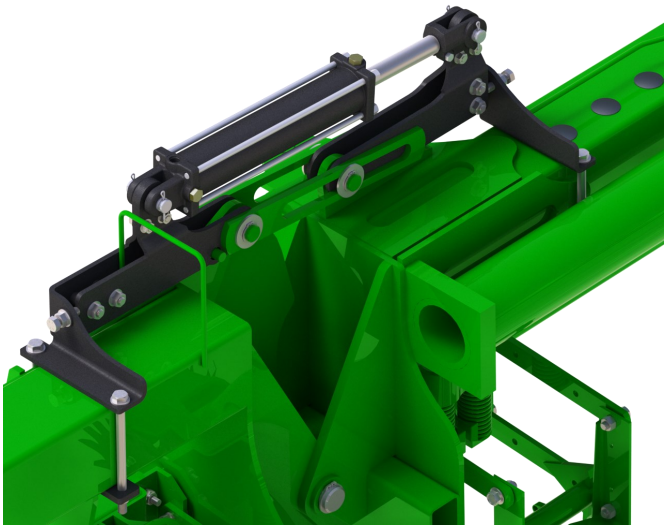

Hydraulic Frame Weight Distribution System

Can be used with Frame Mounted Opener

Fits 1790/95 12 and 16 Row

- In-Cab Control Box with harness (Electronic PWM version)
- Bolt on brackets
- Hydraulic Pressure Gauge
- Grade 8 mounting hardware
- Industry standard durable hydraulic valve
- NOTE: Kit does not include custom hydraulic hoses or fittings

Check fit up for Center Frame Mounted Fertilizer Tanks and Brackets for possible tank mounting bracket modifications if needed

Closing Systems

CCR CLOSER

NEW PRODUCT 2020

CCR Two Stage Closing System *(patent pending)* features:

- CCR Closer with air spring down pressure and adjustable toe-in.
- Press wheel assembly with adjustable down pressure to maximize seed to soil contact and moisture following the closing wheels.
- Choice of Closing Wheels (Cupped Razors or Cupped Dimple) and Press Wheel (6x12-Shown) or 4x12.

**Base Model does not include Closing Wheels.*

Included with CCR Two Stage system: (1) CCR Closing Chassis (900173), (1) Second Stage Assembly (900237).

Closing Systems

Case IH 2000 Closing System

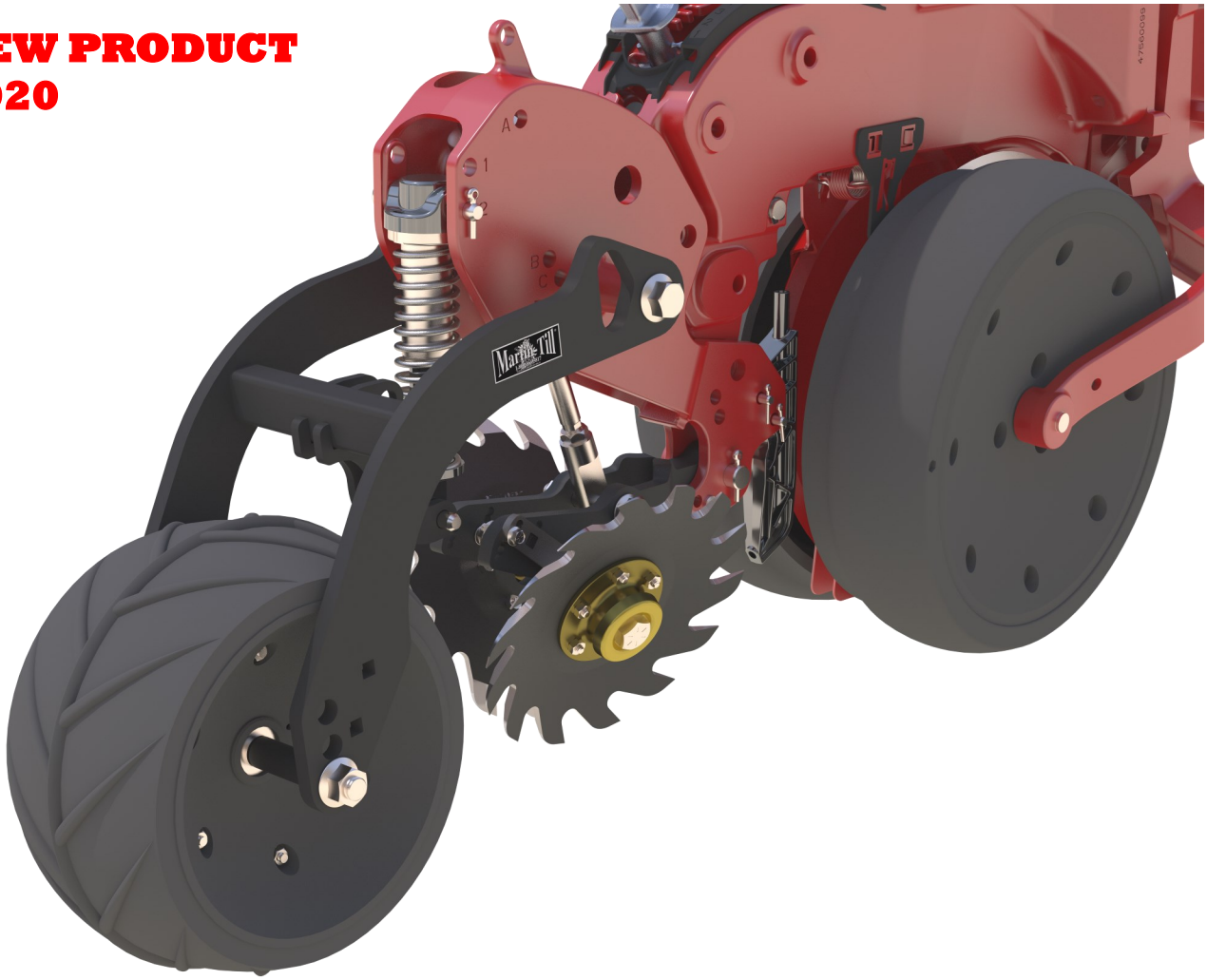

Case-IH Razor Spading Closing Kit *(patent pending)*

- Compatible with Case-IH 2000 Series Planters.
- Changes factory angle to V Style.
- New Axles allow for adjustable Toe-in to change the trench closure for varying soil conditions.
- Updated Press Wheel Arms.
- Optional 9.5" Cupped Razors feature sharpened teeth that chip the side walls.

Included in Kit: (1) Closing Wheel Assembly (900250), (1) Swing Arm.

Does not include Top Bushings and bolts for Swing arm, Cylinder, Spring Assembly or Press Wheel (Bushings and Hardware).

Spading Closing Wheel

BSCW1341

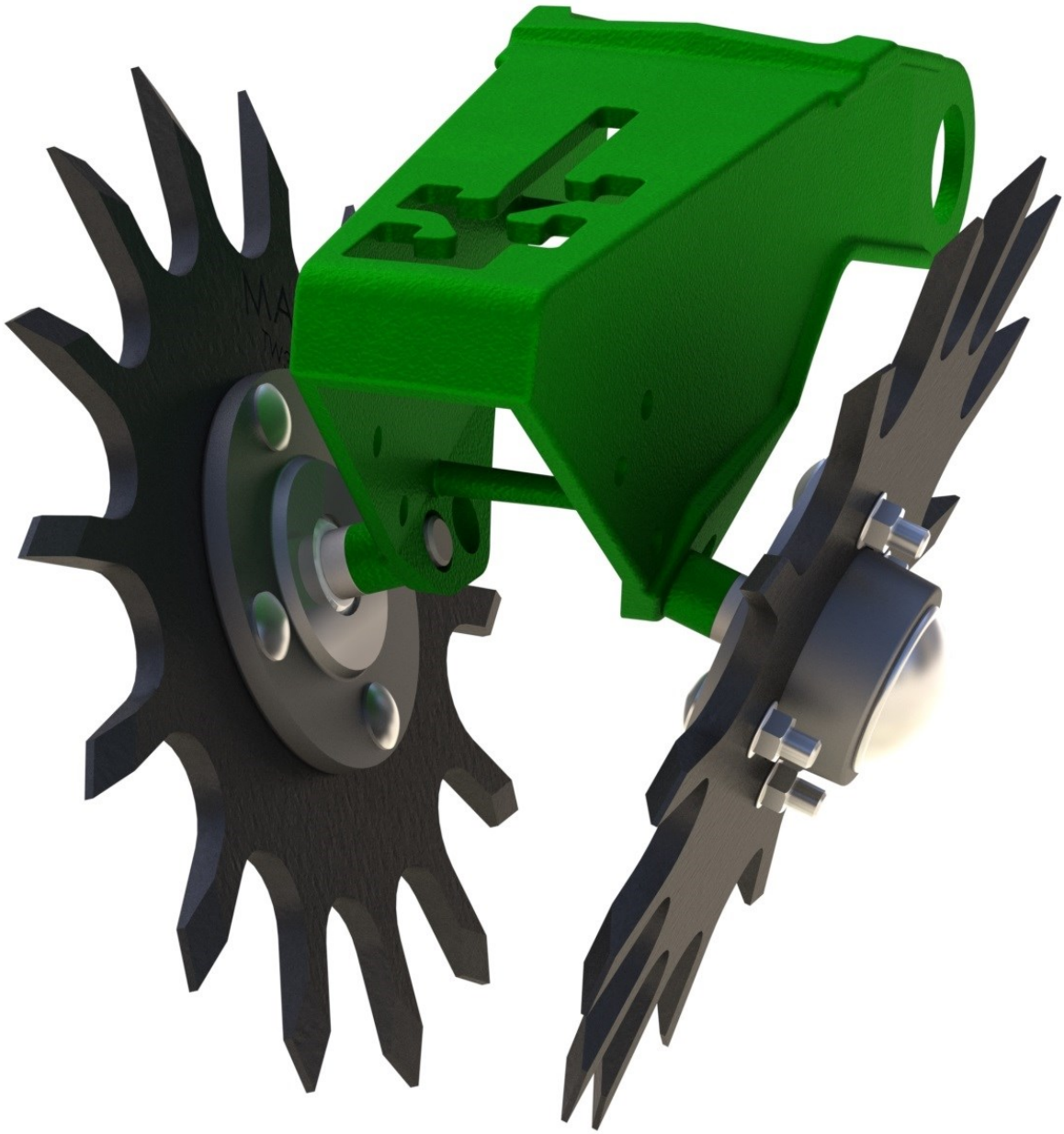

BSCW1341- Double 13” spike wheels and hubs. For planters with roll-pin attached hubs: Deere 7000 & 7100 series, early Kinze.

Components: (1) TW3813-L4, (1) TW3813-R4, (2) CHU44-A,
(2) A70 Kit.

(Note: 13” wheels are not suitable for single wheel use.)

Spading Closing Wheel

BSCW1343

BSCW1343- Double 13” spike wheels and hubs. For planters with 17 mm stud bolt on closing wheel frames: Deere 7200, 7300 series.

Components: (1) TW3813-L4, (1) TW3813-R4, (2) CHU44-A.

(Note: 13” wheels are not suitable for single wheel use.)

Spading Closing Wheel

BSCW1344

BSCW1344- Double 13” spike wheels and hubs. For planters with bolt-on hubs: Deere 1700 series, Late Kinze, White 6000 & 8000 series.

Components: (1) TW3813-L4, (1) TW3813-R4, (2) CHU44-B2, (1) DK-O1(Drop Down Kit). All hardware included.

(Note: 13” wheels are not suitable for single wheel use.)

Spading Closing Wheel

BSCW1541

BSCW1541L or BSCW1541R - 15” spike wheel and hub for single closing wheel on planters with roll-pin attached hubs:
Deere 7000-7100 series, early Kinze.

BSCW1541L (SHOWN) Components:(1) TW3815-R4, (1) CHU44-A, (1) A70 Kit.

BSCW1541R Components: (1) TW3815-L4, (1) CHU44-A, (1) A70 Kit.

Spading Closing Wheel

BSCW1543

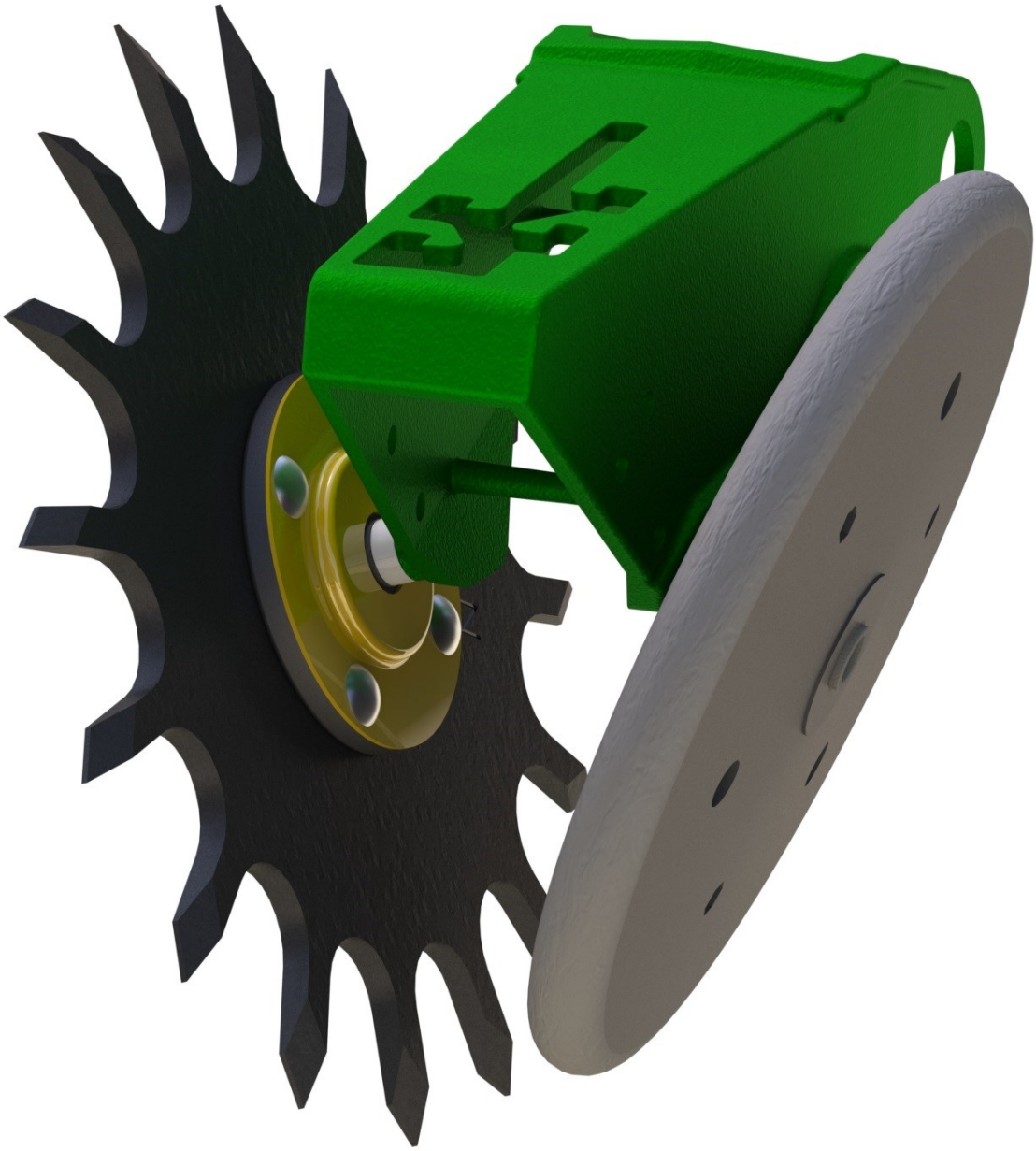

BSCW1543L or BSCW1543R - 15” spike wheel and hubs. For planters with welded stud bolts: Deere 7200, 7300 series.

BSCW1543L (SHOWN) Components: (1) TW3815-R4, (1) CHU44-A.

BSCW1543R Components: (1) TW3815-L4, (1) CHU44-A.

Spading Closing Wheel

BSCW1544

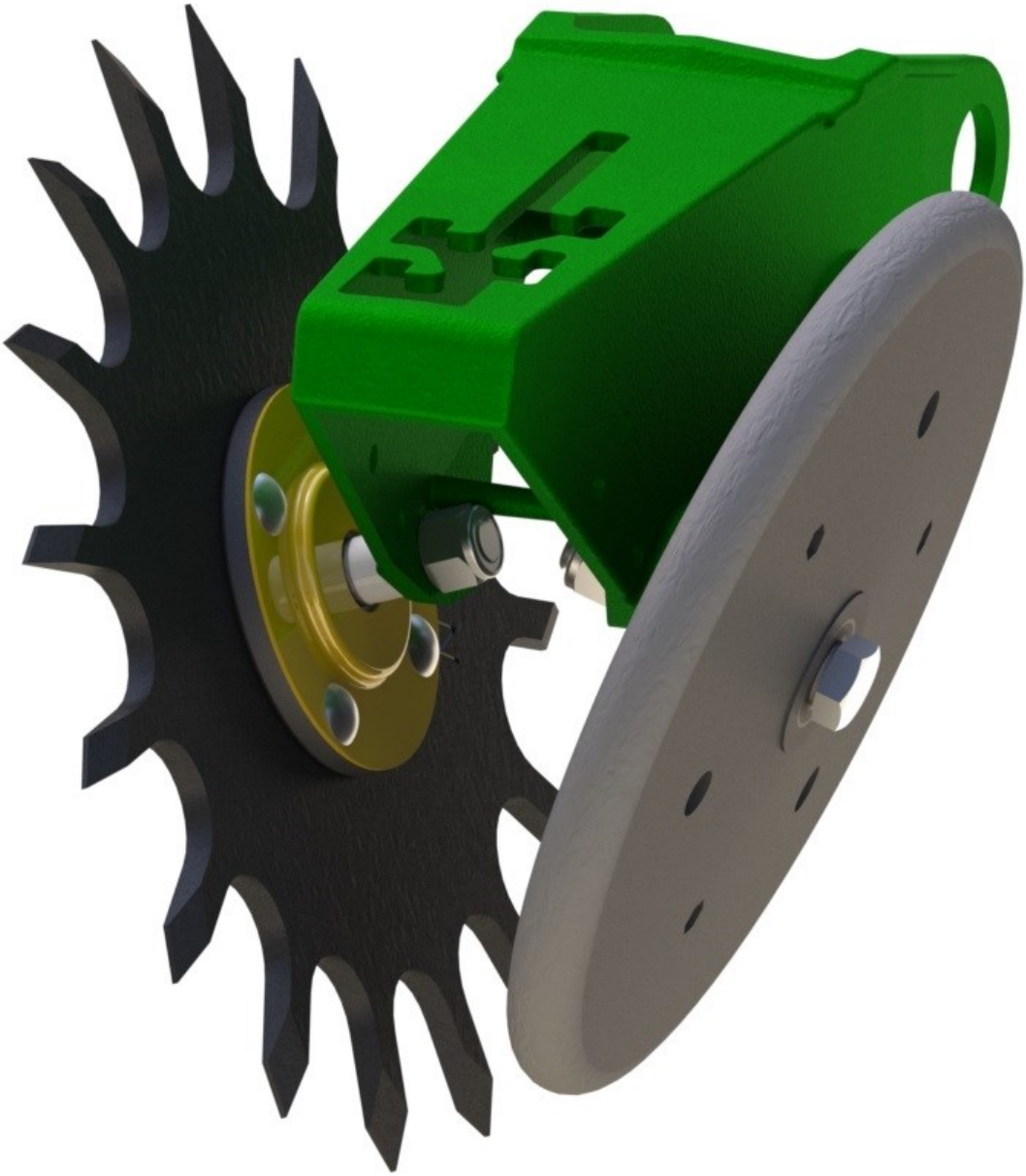

BSCW1544L or BSCW1544R - 15” spike wheel and hub for single closing wheel on planters with bolt-on hubs: Deere 1700 series, late Kinze, White 6000 & 8000 series.

BSCW1544L (SHOWN) Components: (1) TW3815-R4, (1) CHU44-B2.

BSCW1544R Components: (1) TW3815-L4, (1) CHU44-B2.

Spading Closing Wheel

BSCW899

BSCW899 – 9” Spading Closing wheels and hubs replaces closing disk on Case IH 800, 900, & 1200 series planters. Will also fit Deere and Kinze shallow closing systems.

Spading Closing Wheel

BSCW899

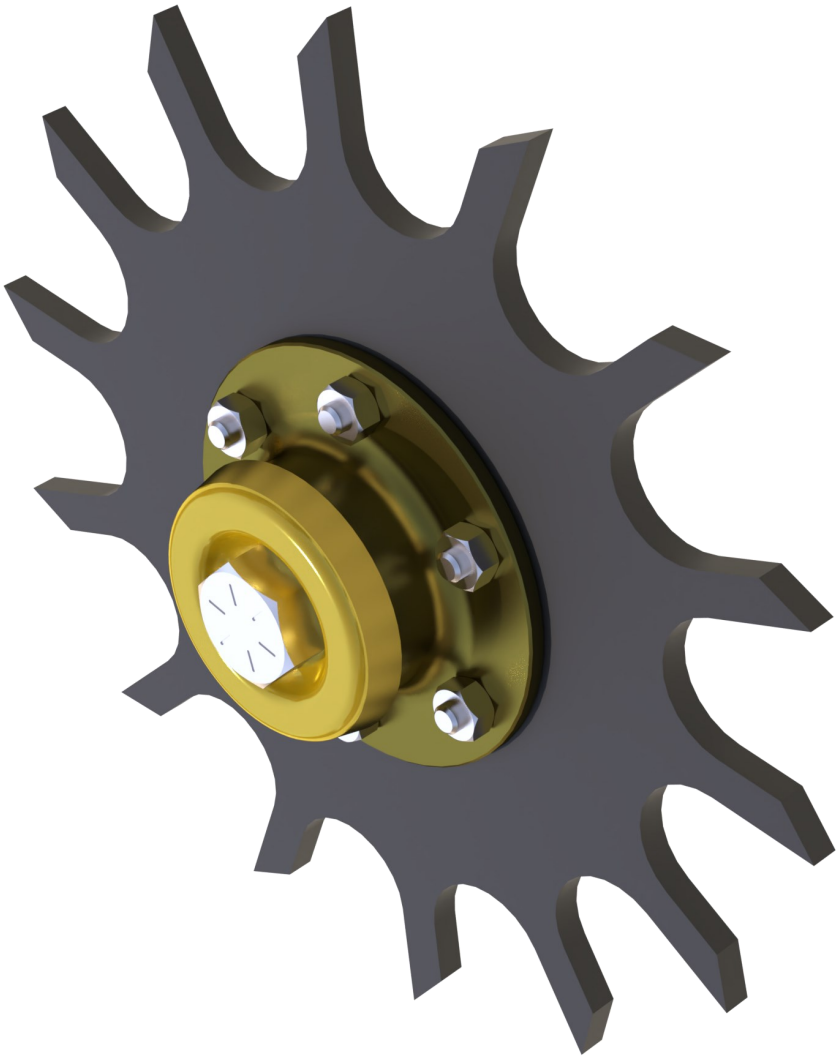

BSCW899 - 9” spike wheels and hubs. Replaces closing disk on Case IH 800, 900, 950, and 1200 series planters; use on offset closing arm only. Will also fit Deere and Kinze shallow closing systems.

Components: (1) SCW899L and (1) SCW899R.

Exploded View-SCW899 Closing Wheel

BSCW899R/L

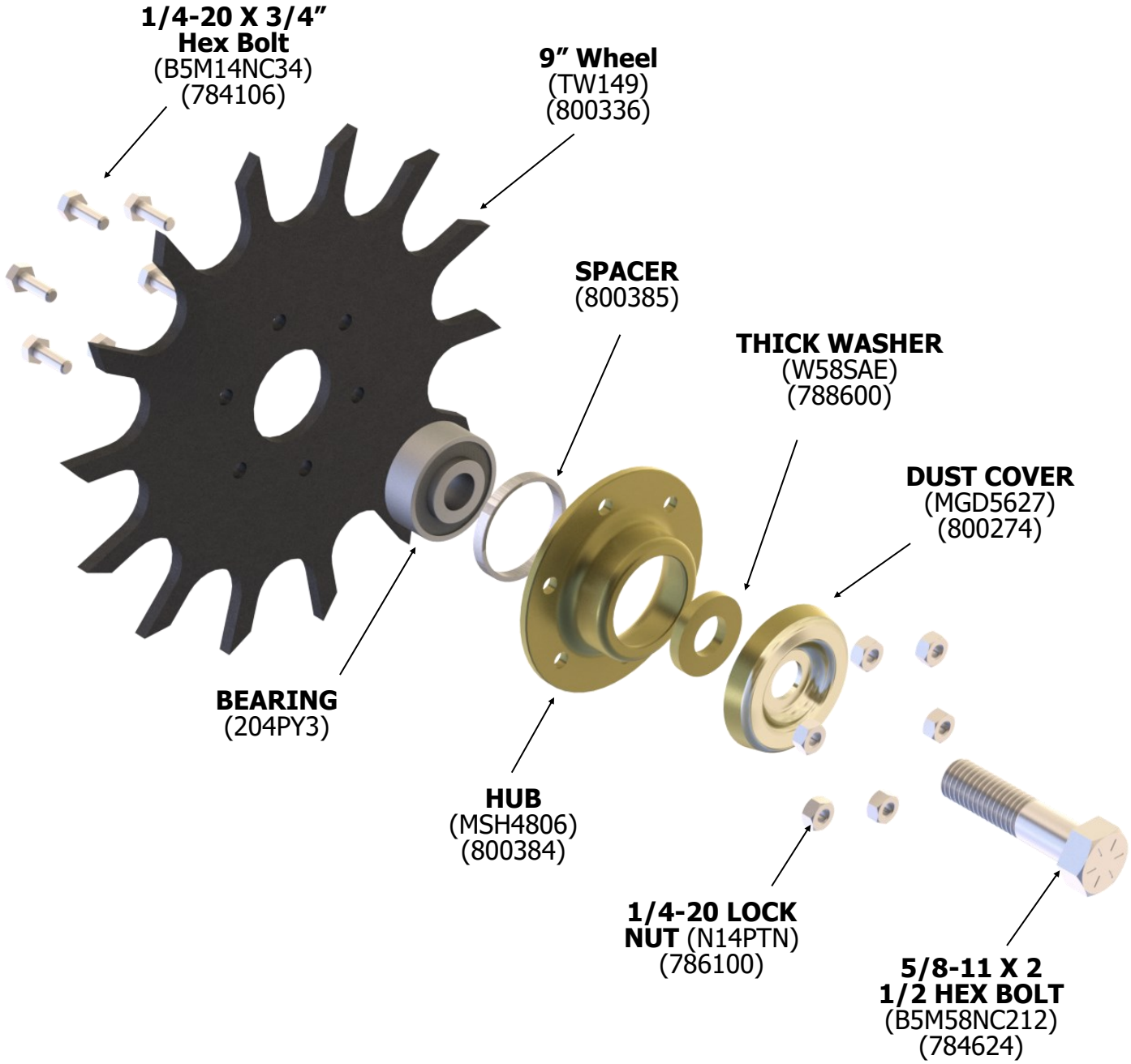

SCW899L SHOWN
SCW899R - THE TW149 IS REVERSED.

Razor Spading Closing Wheel®

BSCW8ZC

BSCW8ZC –8” Cupped Razor wheel and hub replaces closing disk on Case IH 800, 900, & 1200 series planters. Will also fit Deere and Kinze shallow closing systems.

Razor Spading Closing Wheel®

BSCW95ZC

BSCW95ZC –9.5” Cupped Razor wheels and hubs replaces closing disk on Case IH 800, 900, & 1200 series planters. Will also fit Deere and Kinze shallow closing systems.

Sharpened Teeth chips side wall while forcing soil towards seed to close furrow

Razor Spading Closing Wheels®

BSCW1444C

BSCW1444C RH/LH - 14” Cupped Razor Closing wheels and hubs. For planters with Bolt-on Hubs:

Deere 1700 series, Kinze 3000 and up, Harvest International, Horsch, White 6000,8000, and 9000 series and others

Razor Teeth break side wall while cupped design SQUEEZES soil towards seed ensuring good seed to soil contact

Components: (1) RTW141418RC (800316), (1) RTW141418LC (800315), (2) CHU44B2 (900201).

BSCW1441C For planters with roll-pin attached hubs: Deere 7000, Kinze early 2000
BSCW1443C For Deere 7200 series planters

Dimple Closing Wheels

BSCW1344D

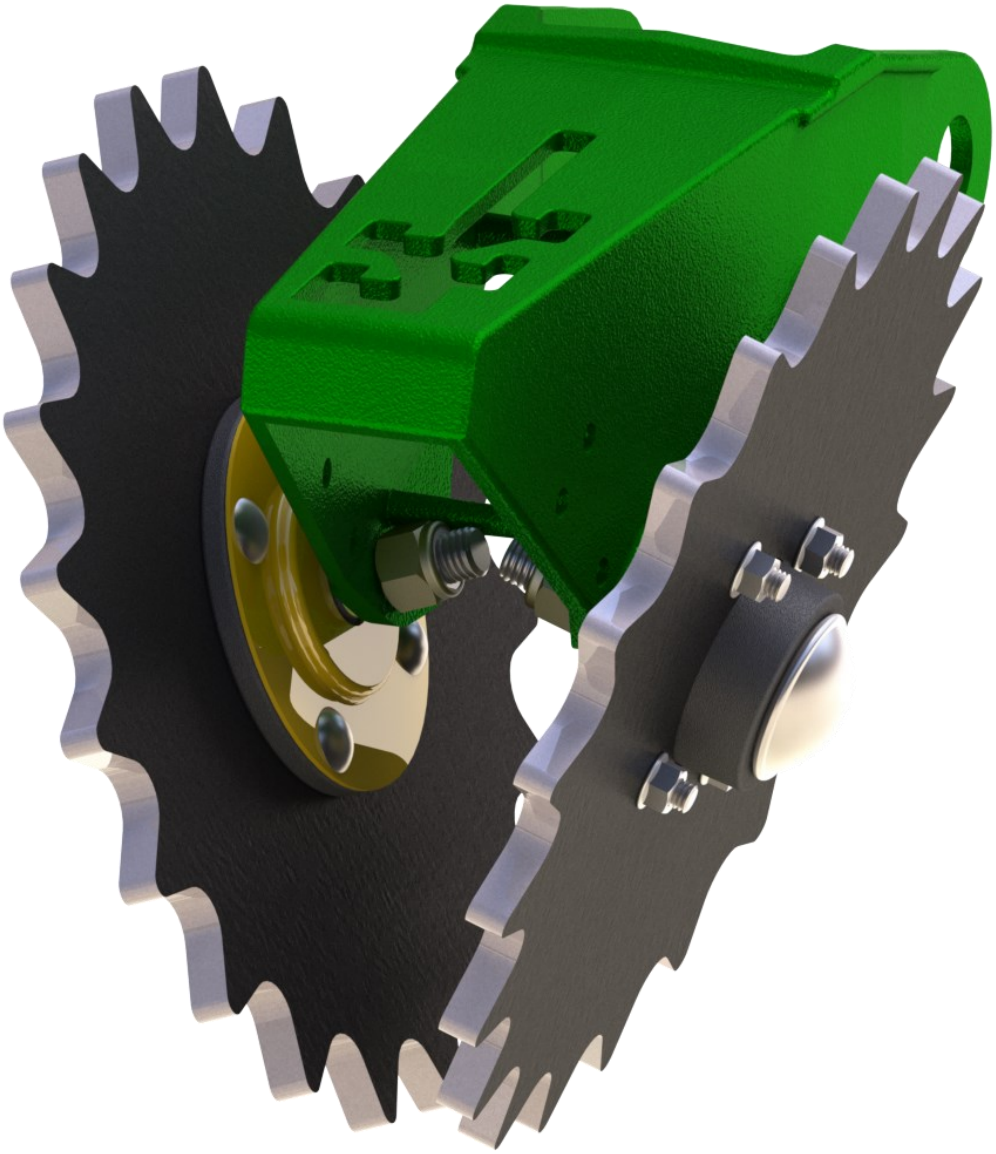

BSCW1344D - 13” Dimple Closing wheels and hubs. For planters with Bolt-on Hubs:

Deere 1700 series, Kinze 3000 and up, Harvest International, Horsch, White 6000,8000, and 9000 series and others

20 Rounded Points Crumble Sidewalls and less aggressive than spike closing wheels. Works well on high speed planters

Components: (2) DW2013-4 (800323), (2) CHU44B2 (900201).

BSCW1341D For planters with roll-pin attached hubs: Deere 7000, Kinze early 2000

BSCW1343D For Deere 7200 series planters

Dimple Closing Wheels

BSCW1344DC

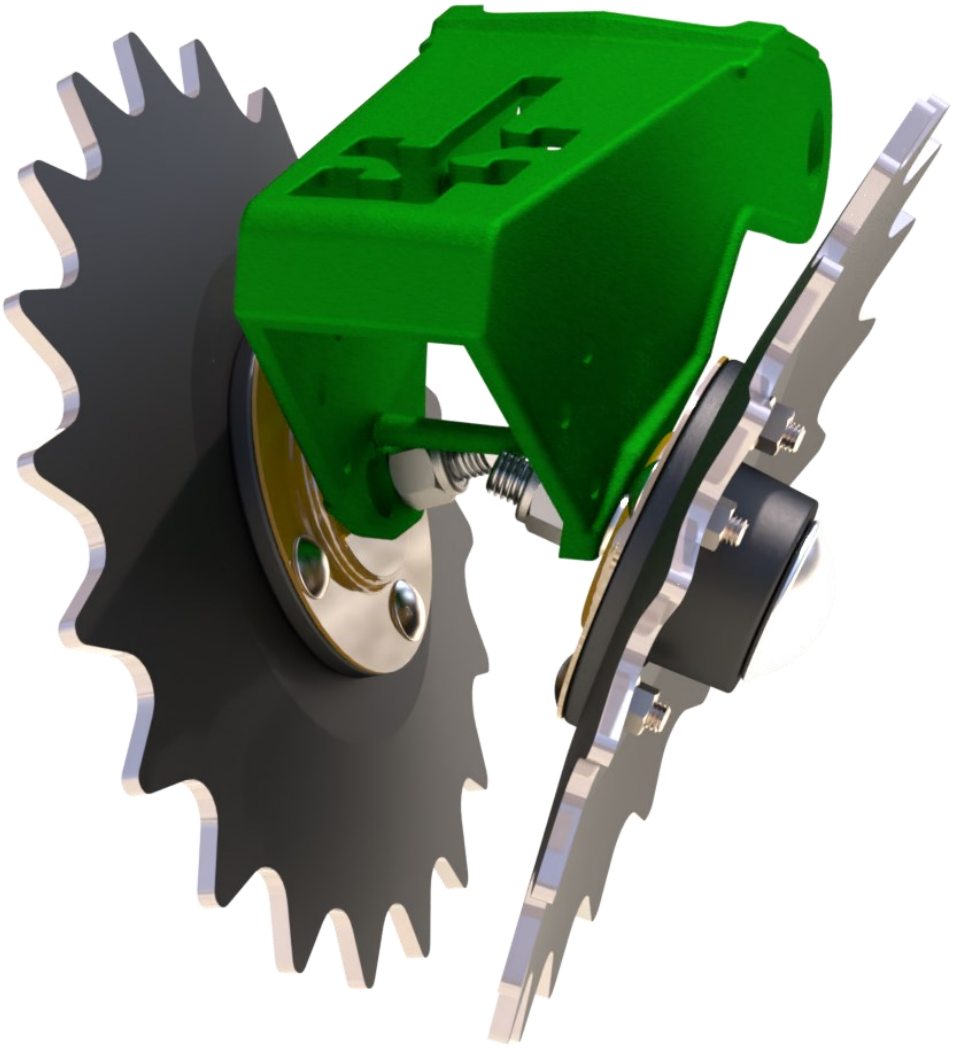

BSCW1344D - 13” Cupped Dimple Closing wheels and hubs. For planters with Bolt-on Hubs:

Deere 1700 series, Kinze 3000 and up, Harvest International, Horsch, White 6000,8000, and 9000 series and others

20 Rounded Points Crumble Sidewalls and less aggressive than spike closing wheels. Works well on high speed planters

Components: (2) DW-201319 (800331), (2) CHU44B2 (900201).

Spading Closing Wheel

BSCW51

U.S. Patent #5,497,717

BSCW51 - Double 13” spike wheels and hubs; angle brackets.
For White 5100 planters.

Components: (1) TW3813-L4, (1) TW3813-R4, (1) CWB51L, (1) CWB51R, (1) SCW5161, (2) CHU44-B2.

Spading Closing Wheel

BSCW61

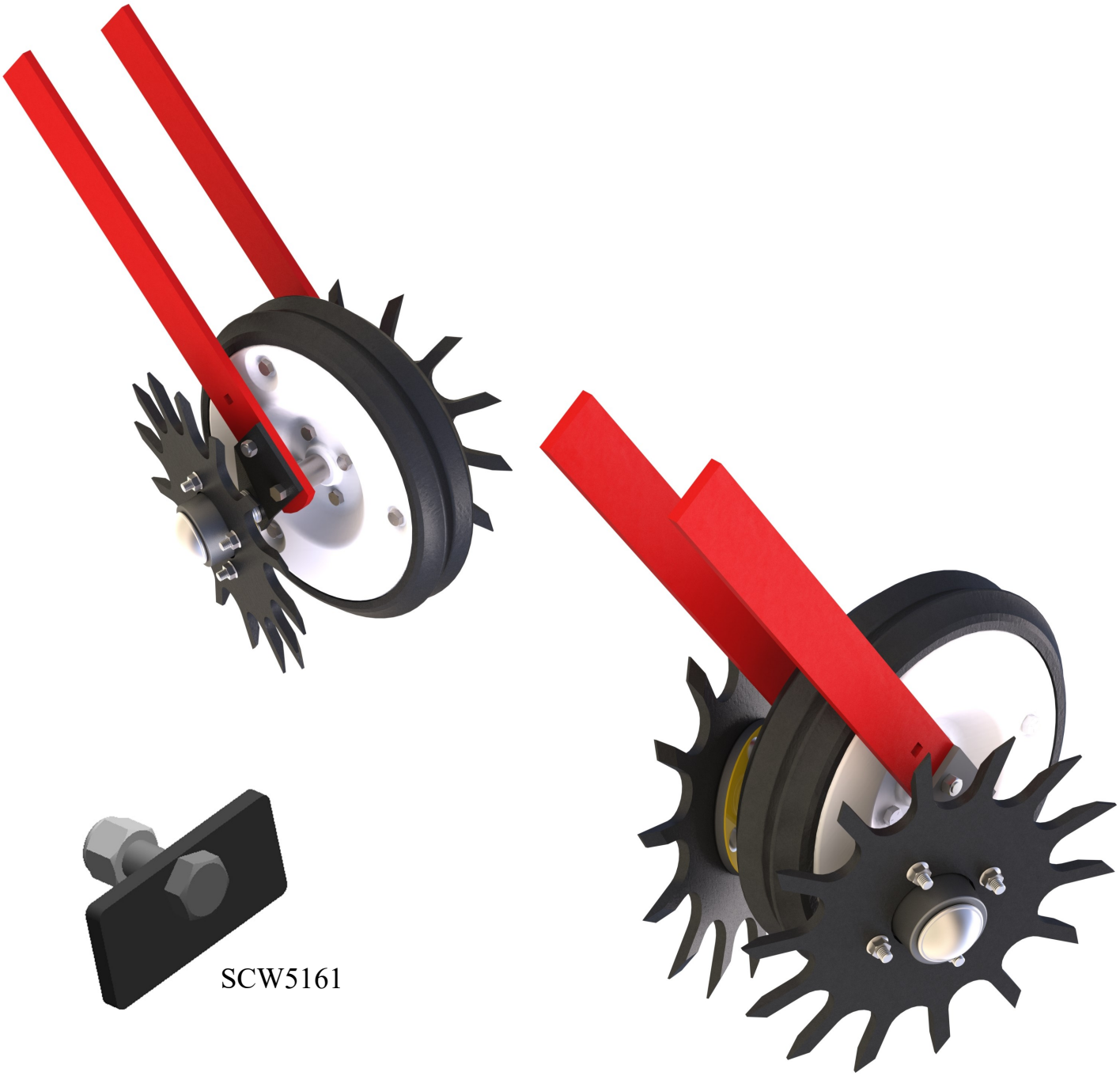

U.S. Patent #5,497,717

BSCW61 - Double 13” spike wheels and hubs; angle brackets. For White 6100 planters with single 4” x 12” factory closing wheel option.
*** Will not fir recessed H bracket.**
Components: (1) TW3813-L4, (1) TW3813-R4, (1) CWB61L, (1) CWB61R, (1) SCW5161, (2) CHU44-B2.

Spading Closing Wheel

BSCW75B R/L

SCW75BL SHOWN
SCW75BR OPPOSITE

U.S. PATENT NO #5,497,717

BSCW75BL - Left side 13” spike wheel and ball bearing hub for JD750 drill. (May substitute dimple wheels for spike wheels, model BSCW75BLD. Preferred for shallow seeding.)

Components: (1) TW3813-R4, (1) CHU44-B2, (1) A3458L, (4) 3/4” flat washers.

Note: When ordering for a left side, a right wheel will be sent.

BSCW75BR Right side 13” spike wheel and ball bearing hub for JD750 drill. (May substitute dimple wheels for spike wheels, model BSCW75BRD. Preferred for shallow seeding).

Components: (1) TW3813-L4, (1) CHU44-B2, (1) A3458R, (4) 3/4” flat washers.

Note: When ordering for a right side, a left wheel will be sent.

Exploded View-SCW75 Closing Wheel

BSCW75B R/L

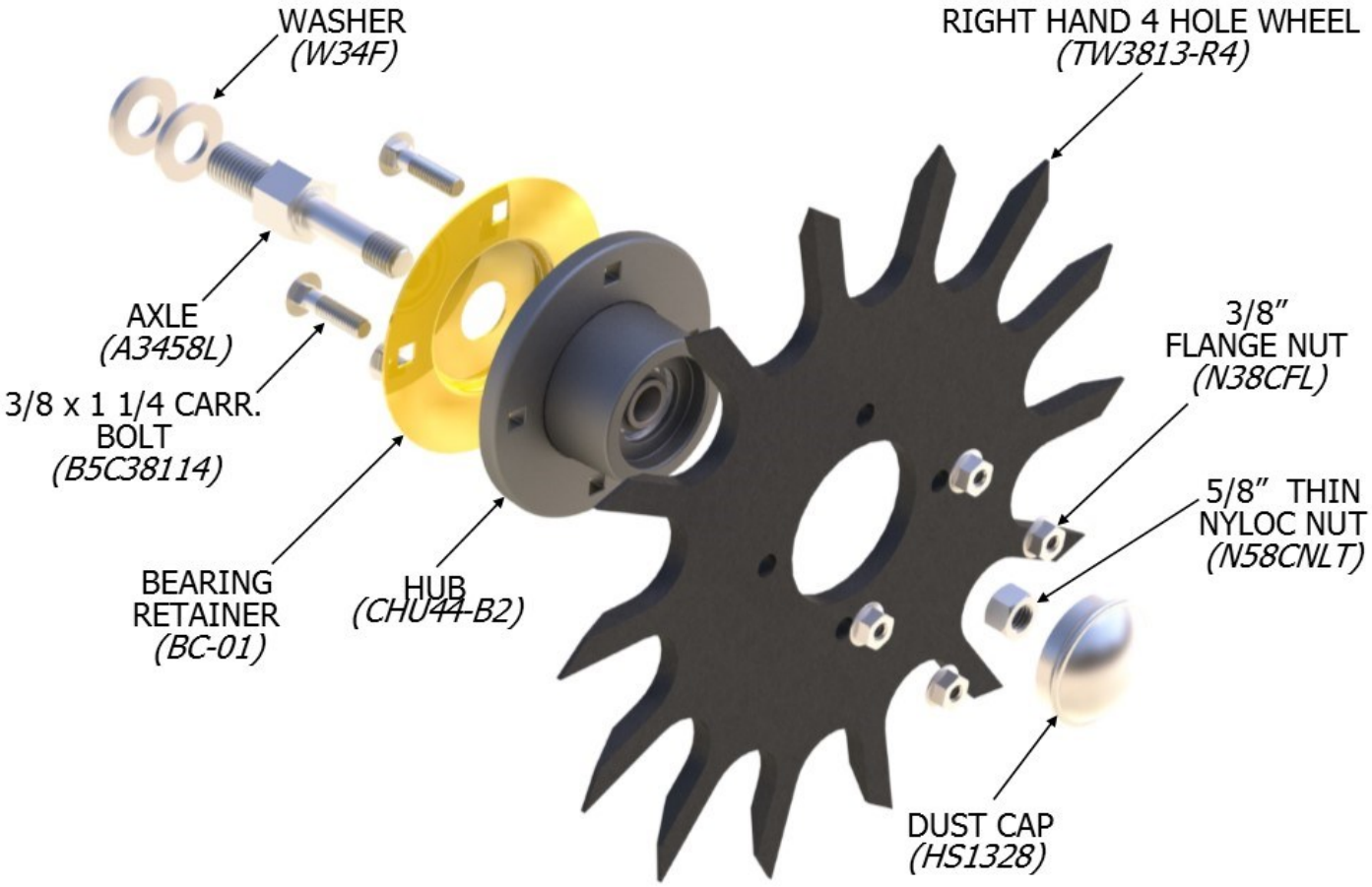

Spading Closing Wheel

BSCW156-4 R/L

U.S. PATENT NO #5,497,717

BSCW156L - Left side 13” spike wheel with adapter for JD1560 and 1860 drills.

Components: (1) TW3813-R4, (1) 156-41, (1) 156-2,
(2) 3/4” flat washers, (1) 5/8” x 7 1/2” hex bolt and nyloc nut. (May substitute dimple wheels for spike wheels, model BSCW156D.)

Note: Use TW3813-R4 to close left side.

BSCW156R - Right side 13” spike wheel with adapter for JD1560 and 1860 drills.

Components: (1) TW3813-L4, (1) 156-41, (1) 156-2,
(2) 3/4” flat washers, (1) 5/8” x 7 1/2” hex bolt and nyloc nut. (May substitute dimple wheels for spike wheels, model BSCW156D.)

Note: Use TW3813-L4 to close right side.

Exploded View-SCW156

BSCW156-4 R/L

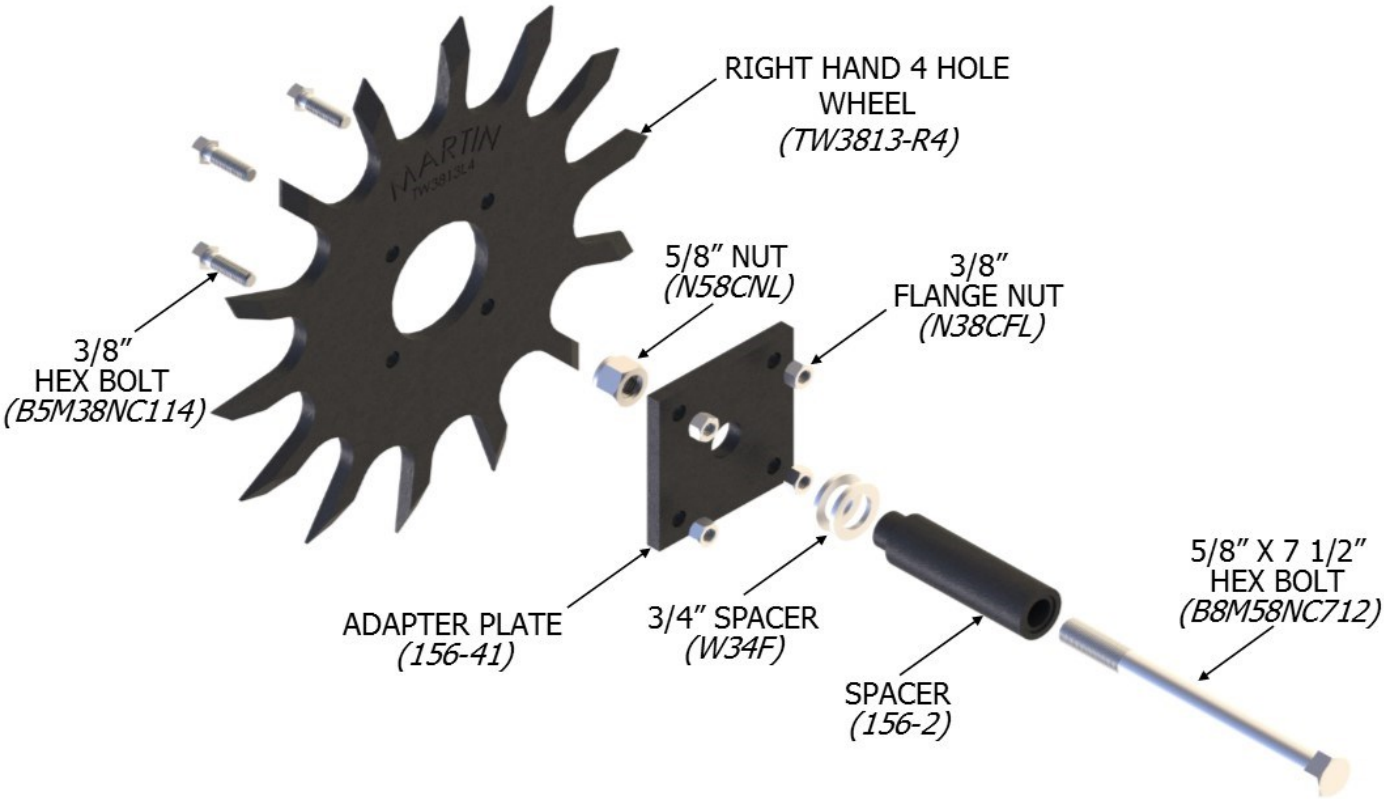

SCW156R - Shown above

SCW156L - Requires a TW3813-R4

Exploded View-Closing Wheel Hubs

CHU44-B2

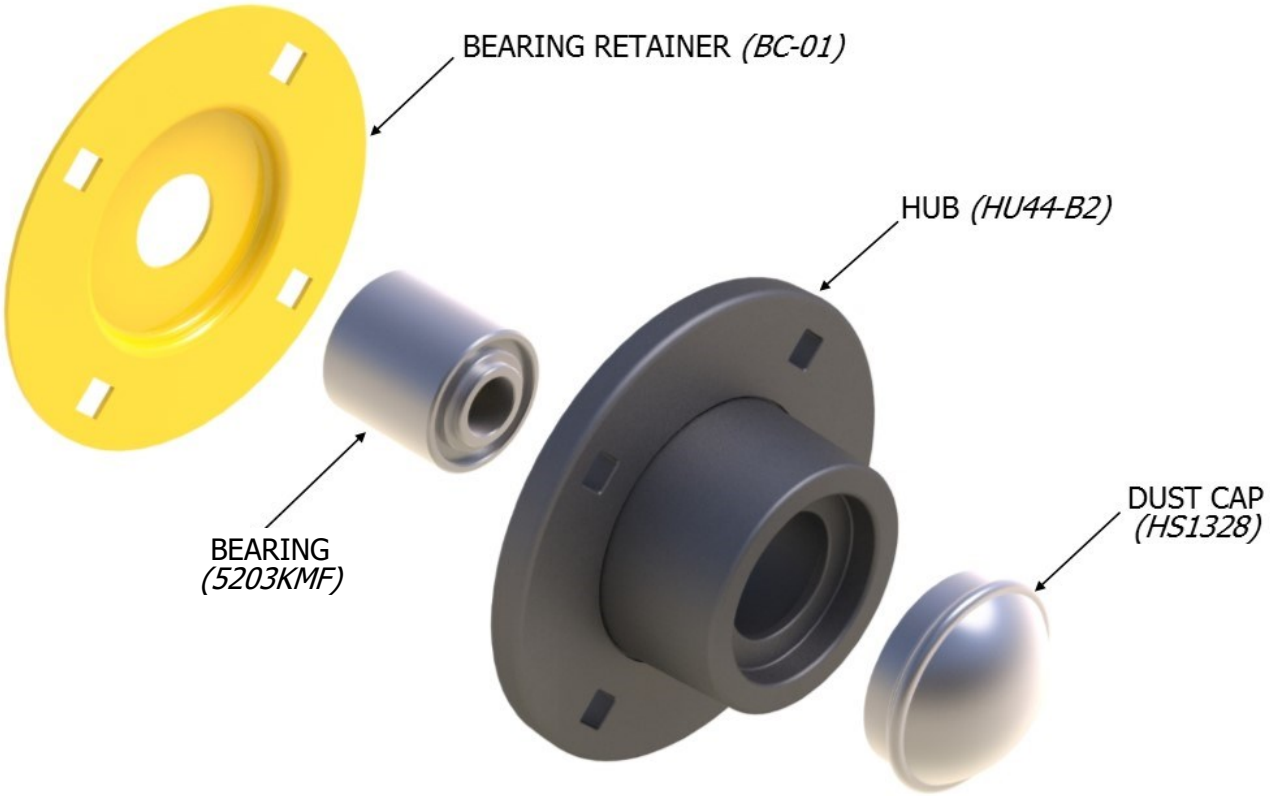

CHU44-A

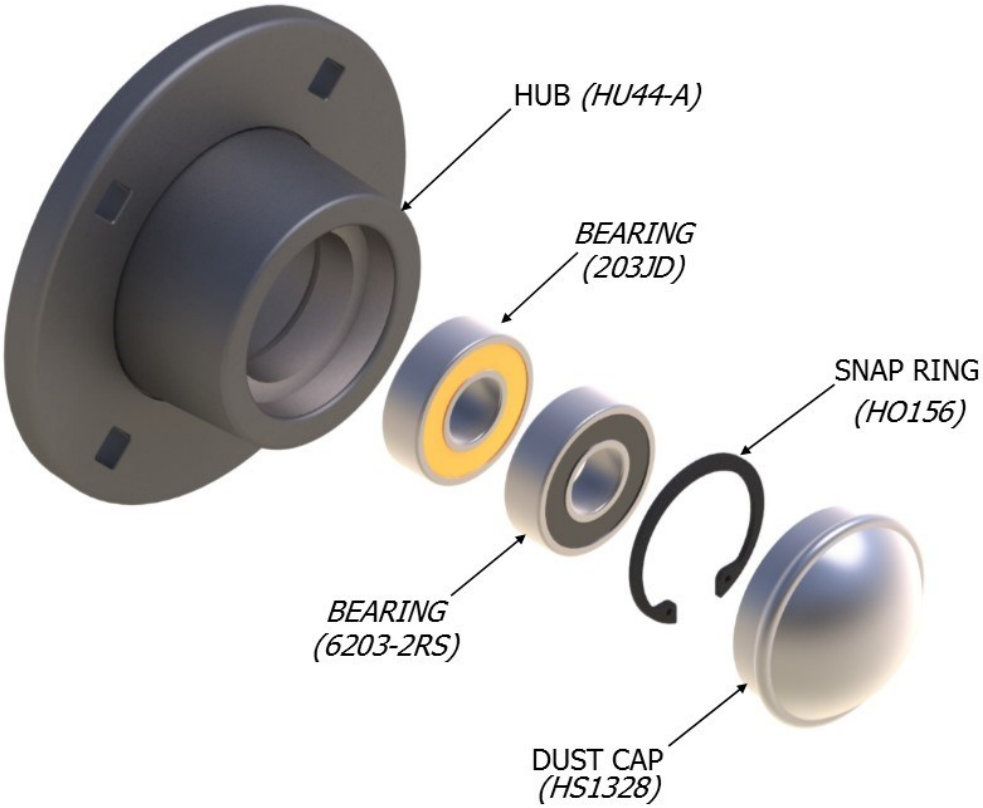

OPTIONS

DCK-01

Drag chain kit with brackets. Heavy square edge cross chain drags loose soil to fill voids created by spike closing wheels Fits Deere, Kinze and White units. Some earlier models may require holes to be drilled.

Includes
1) Bracket *(DCB-01);* QTY-2
2) Chain *(CHN-2538)*
3) Drag Chain Connector Link *(CC84591)* ; QTY-2
4) Hardware Kit

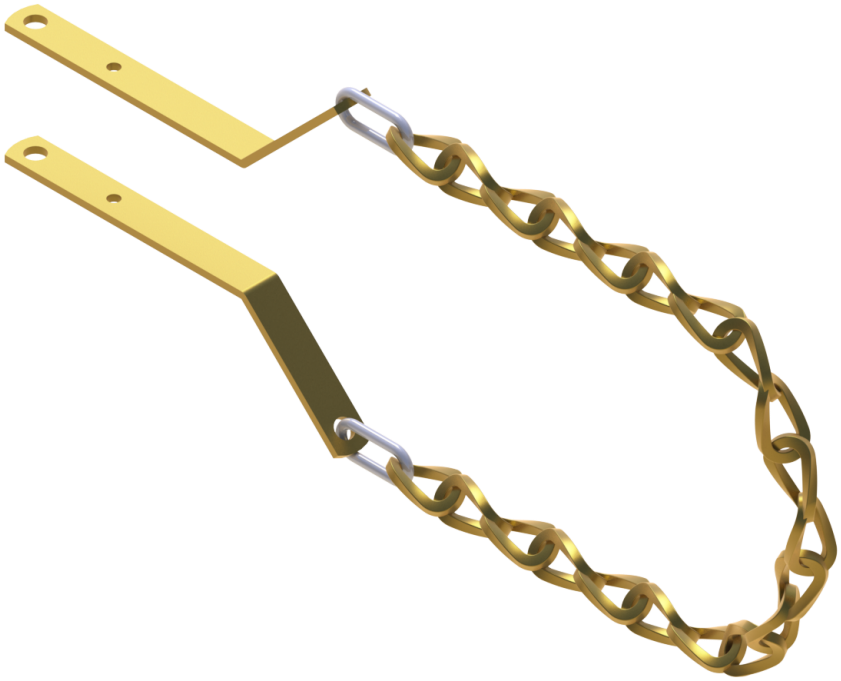

Heavy Duty Speed Disk

ASD15X48

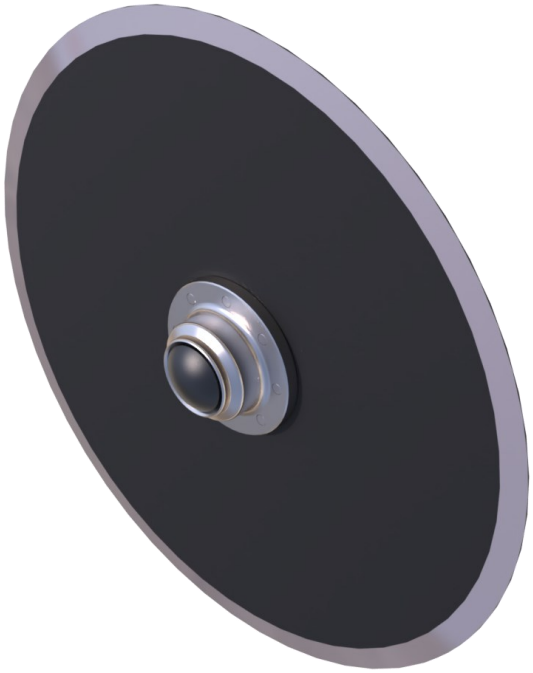

- Heavy Duty 15” x 4mm Blade. 8 bolt pattern Heavy Duty seed disc hub and double row bearing.
- Redesigned hub provides more clearance for gauge wheels.
- Eight countersunk self centering bolts ensure this disc blade runs true and can handle the increased force from high speed planting and hydraulic down force.

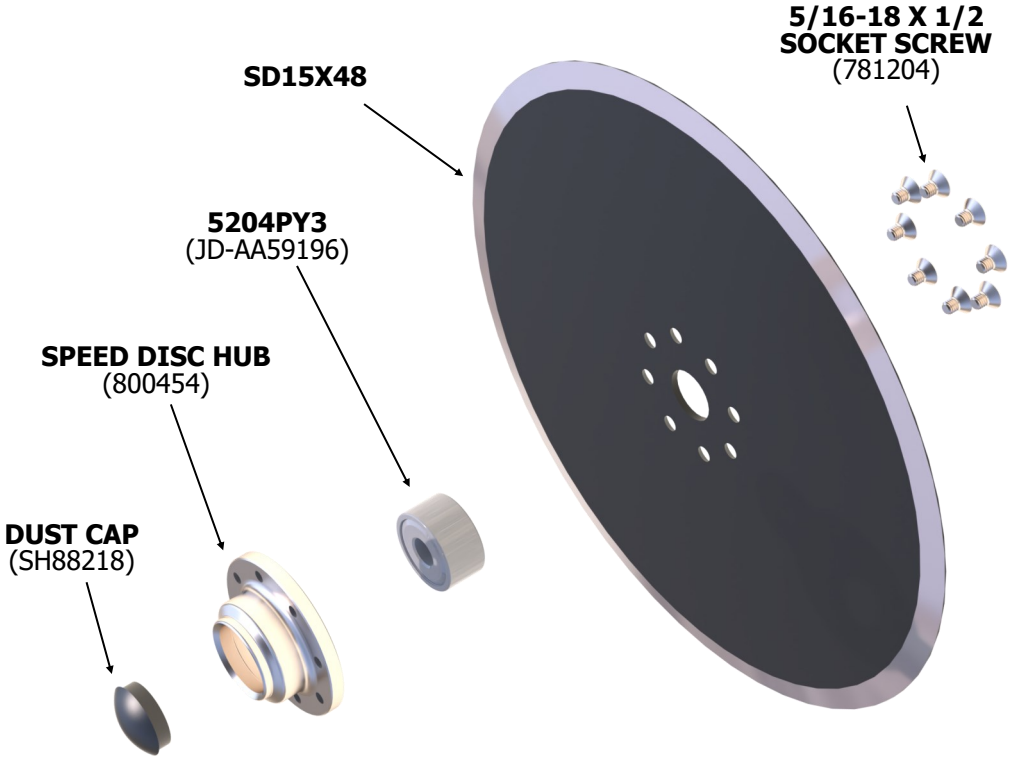

Wheels

TW3813-R4

3/8” thick, 13” diameter right steel wheel; 14 teeth with diamond shaped points. Fits four-bolt hub. Approximate weight: 7.1 lbs.

TW3813-L4

3/8” thick, 13” diameter left steel wheel; 14 teeth with diamond shaped points. Fits four-bolt hub. Approximate weight: 7.1 lbs.

Razor Wheels

RTW1412.5-R4

12.5” Razor Tooth Row Cleaner wheel for use in extreme residue. Fits all Martin 4 Bolt Row Cleaners. Can be run offset or intersected. (Right Wheel)

**Add Z to end of part number to substitute Razor Wheels on any 13” Row cleaner

RTW1412.5-L4

12.5” Razor Tooth Row Cleaner wheel for use in extreme residue. Fits all Martin 4 Bolt Row Cleaners. Can be run offset or intersected. (Left Wheel)

**Add Z to end of part number to substitute Razor Wheels on any 13” Row cleaner

Wheels

TW3815-R4

3/8” thick, 15” diameter right steel wheel. Fits four-bolt hub. Has 16 teeth with diamond shaped points. Approximate weight: 10.0 lbs

TW3815-L4

3/8” thick, 15” diameter left steel wheel. Fits four-bolt hub. Has 16 teeth with diamond shaped points. Approximate weight: 10.0 lbs.

Wheels

TW3817-R4

3/8” thick, 17” diameter right steel wheel. Fits four-bolt hub. Has 16 teeth with diamond shaped points. Approximate weight: 10.0 lbs

TW3817-L4

3/8” thick, 17” diameter left steel wheel. Fits four-bolt hub. Has 16 teeth with diamond shaped points. Approximate weight: 10.0 lbs.

Wheels

DW2013-4

Optional 1/2” thick, 13” diameter wheel with 20 round pointed teeth. Fits four bolt hub. Approximate weight: 14.5 lbs.

TW149

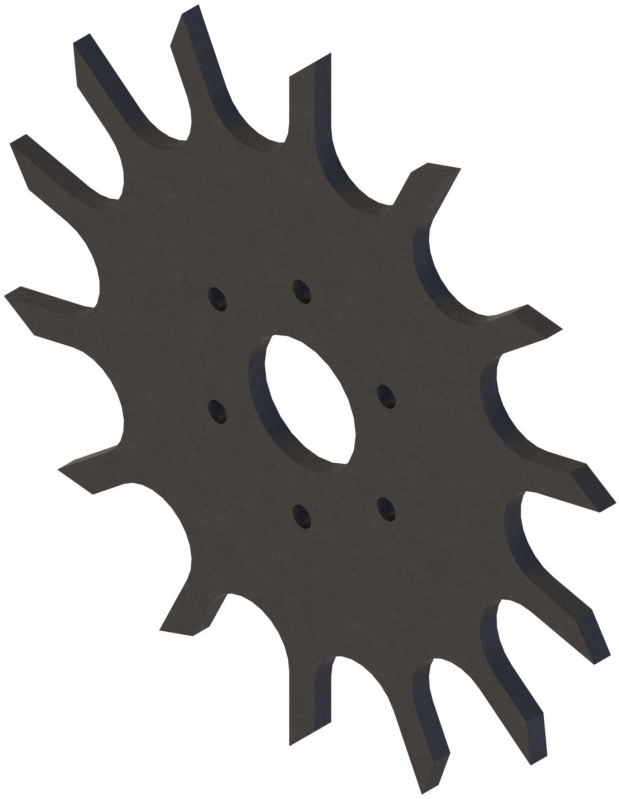

1/4” thick, 9” diameter steel wheel; 14 teeth with sloped points.

Wheels

RTW141418RC (800316)

RTW141418LC (800315)

Wheels

DW 201319 (800331)

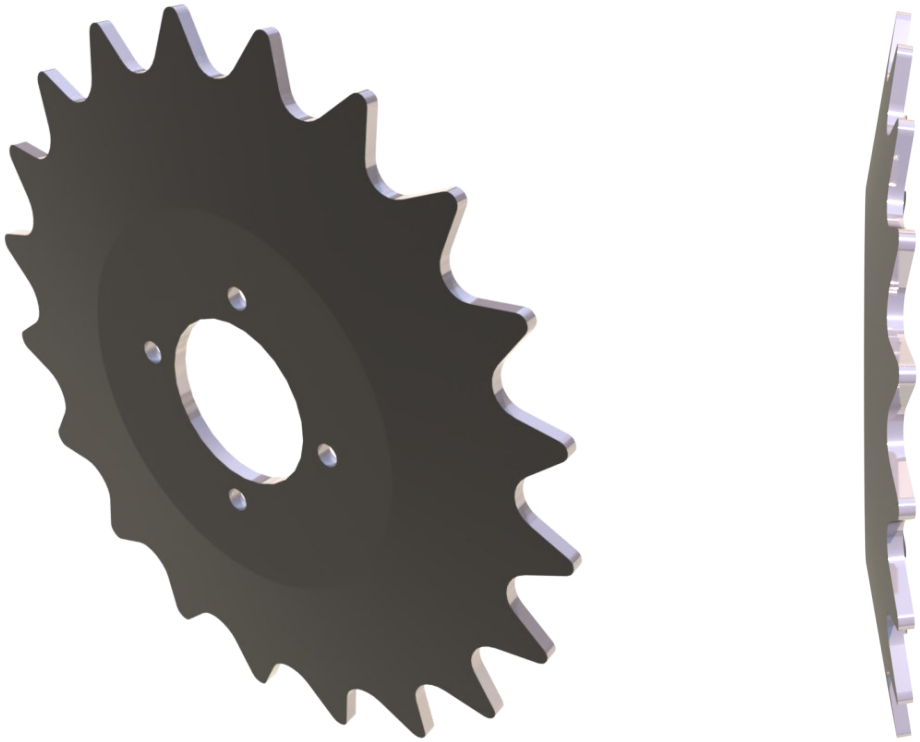

D10552 (800217)

Wheels

TW3815-R

3/8” thick, 15” diameter right steel wheel; 16 teeth with diamond shaped points. Fits three-bolt hub. Approximate weight: 10 lbs.

TW3815-L

3/8” thick, 15” diameter left steel wheel; 16 teeth with diamond shaped points. Fits three-bolt hub. Approximate weight: 10 lbs.

Wheels

TW3813-RK

3/8” thick, 13” diameter right steel wheel; 14 teeth with diamond shaped points with Kinze row cleaner hub hole pattern.
Approximate weight: 7.1 lbs.

TW3813-LK

3/8” thick, 13” diameter left steel wheel; 14 teeth with diamond shaped points with Kinze row cleaner hub hole pattern.
Approximate weight: 7.1 lbs.
.

Side Treader Wheel

STW-01K

Optional aluminum side treader wheel. Fits Kinze row cleaner hub. Two required per row.
Approximate weight: 3.5 lbs.

OPTIONS

GWS-01

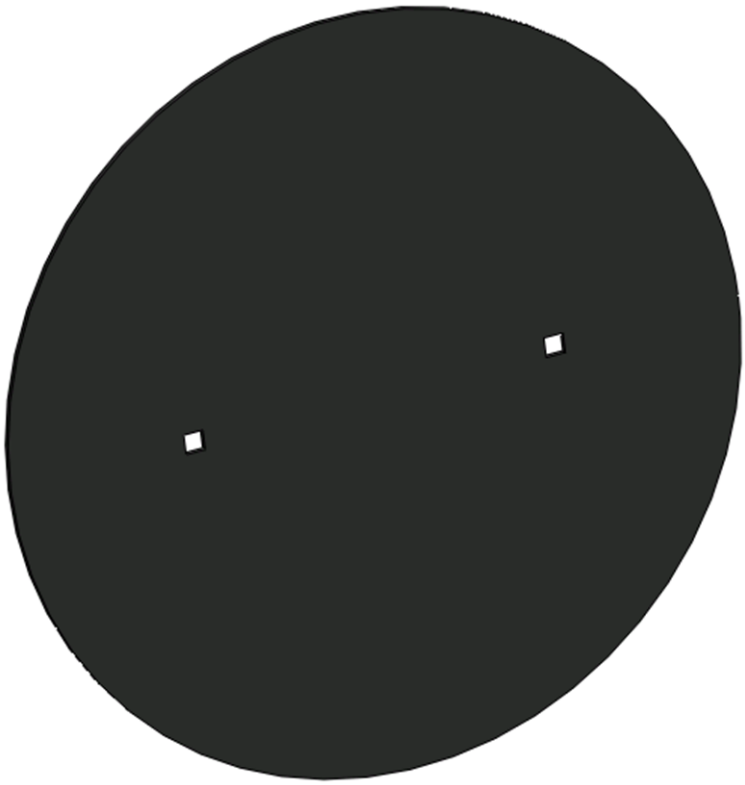

Gauge wheel shield helps smooth the flow of residue past the recesses in unit gauge wheels. Hardware included. Two required per row.

SP-KIT

Weld-on retrofit tabs and spring to provide lift assist.

OPTIONS

ANG-2D

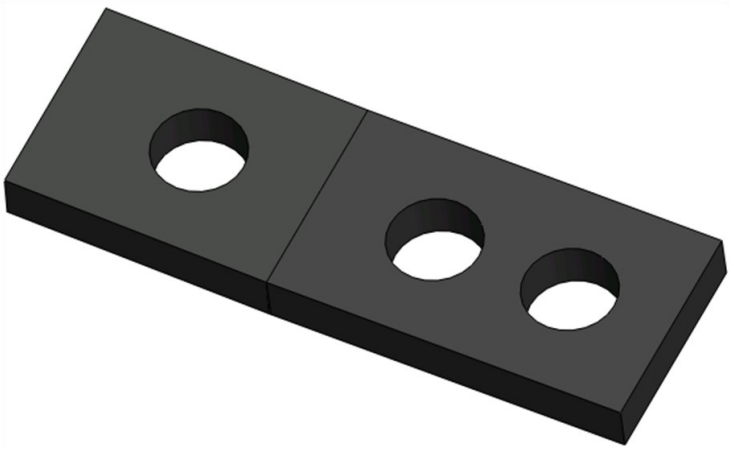

2 Degree angled closing wheel bracket. Increases aggressiveness of spading and dimple closing wheels. Fits late model Deere planters with bolt-on closing wheels.

ANG-2K

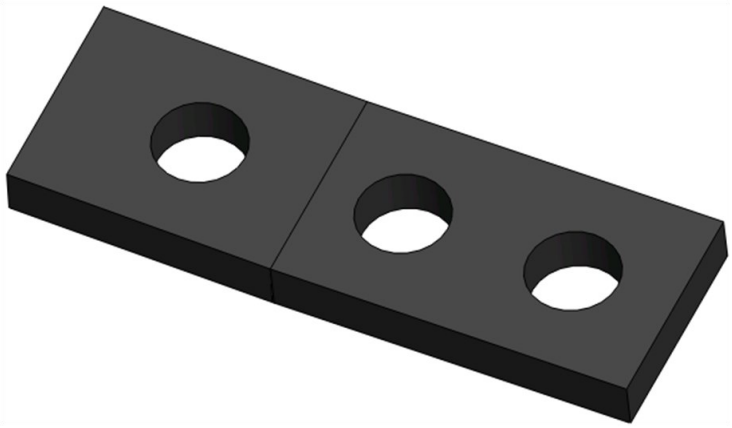

2 Degree angled closing wheel bracket. Increases aggressiveness of spading and dimple closing wheels. Fits Kinze planters with bolt-on closing wheels.

OPTIONS

SG-01

Shaft guard prevents C125 from striking countershaft under main frame when planting over terraces, etc. Not necessary on planters that do not have counter shaft below main frame.

SPT-516

5/16” triangle hub spacer. Fits three-bolt hub.

The most trusted name in no-till
Established 1991

Martin Planter Attachments

Martin Industries LLC

206 Elk Fork Road

Elkton, KY 42220

Telephone: 270-265-5817

E-Mail: martin@martintill.com

www.martintill.com

VERSION 06/8/2020